RK3588S(Power&Gnd)

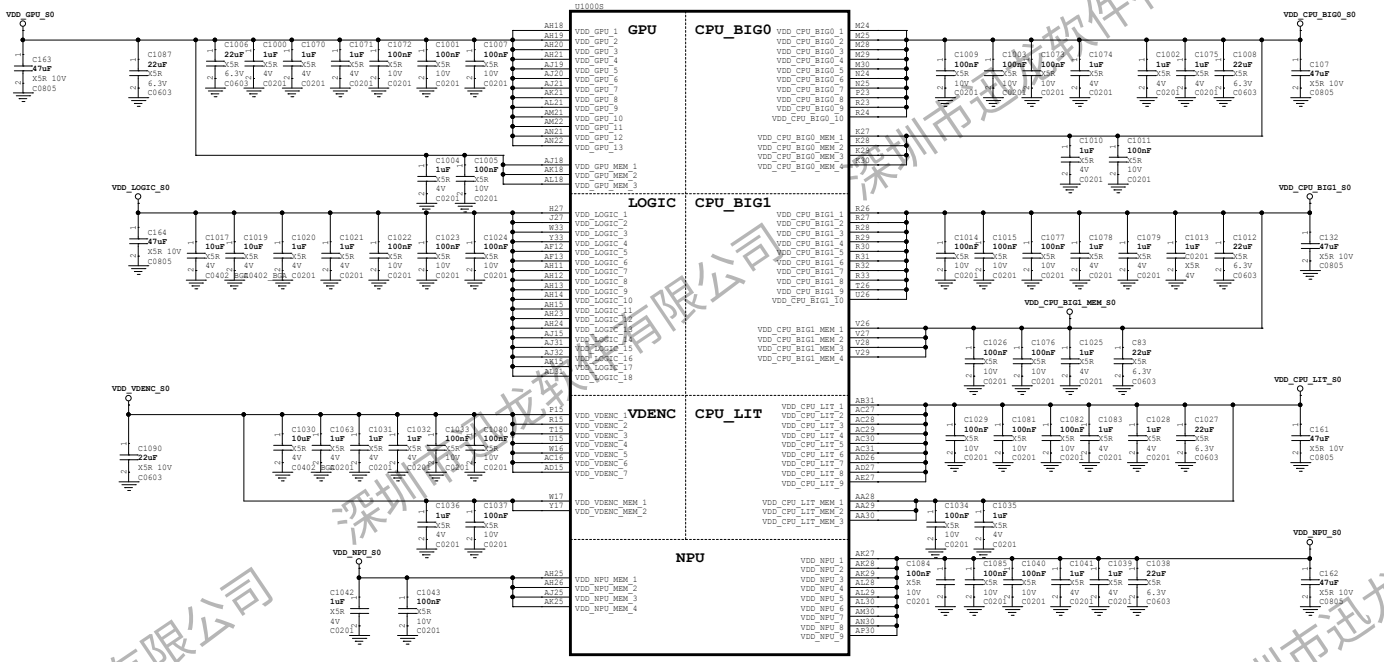

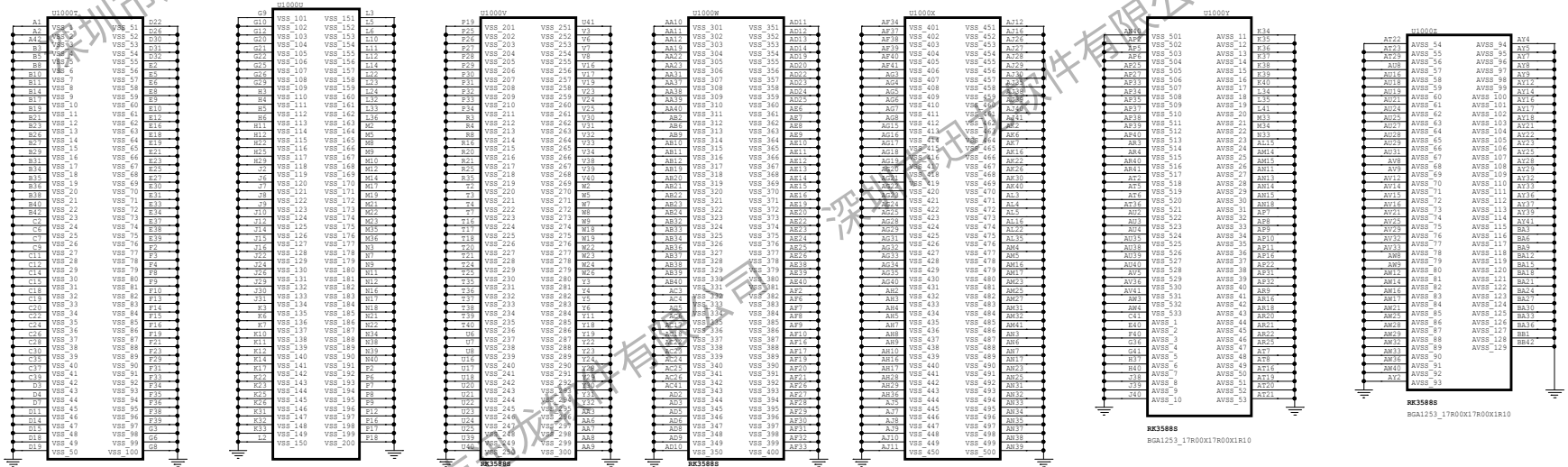

深圳市迅龙软件有限公司

Shenzhen Xunlong Software Co., Ltd			
Project:	OPi 5 Pro		
File:	01.RK3588S_Power/GND		
Date:	Monday, June 03, 2024	Rev:	V1.2
Size: A3	Sheet: 1	Of:	28

RK3588S(OSC/PLL/PMUIO1)

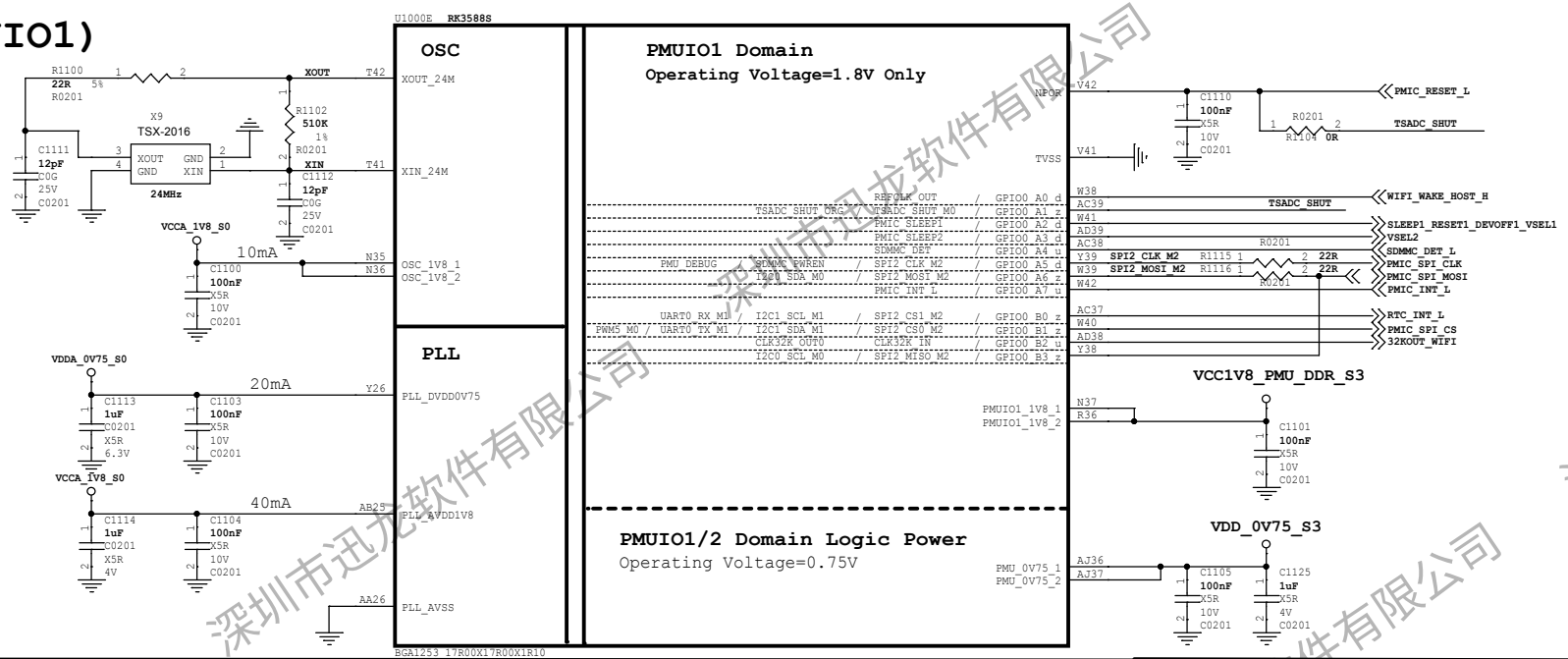

RK3588S(PMUIO2)

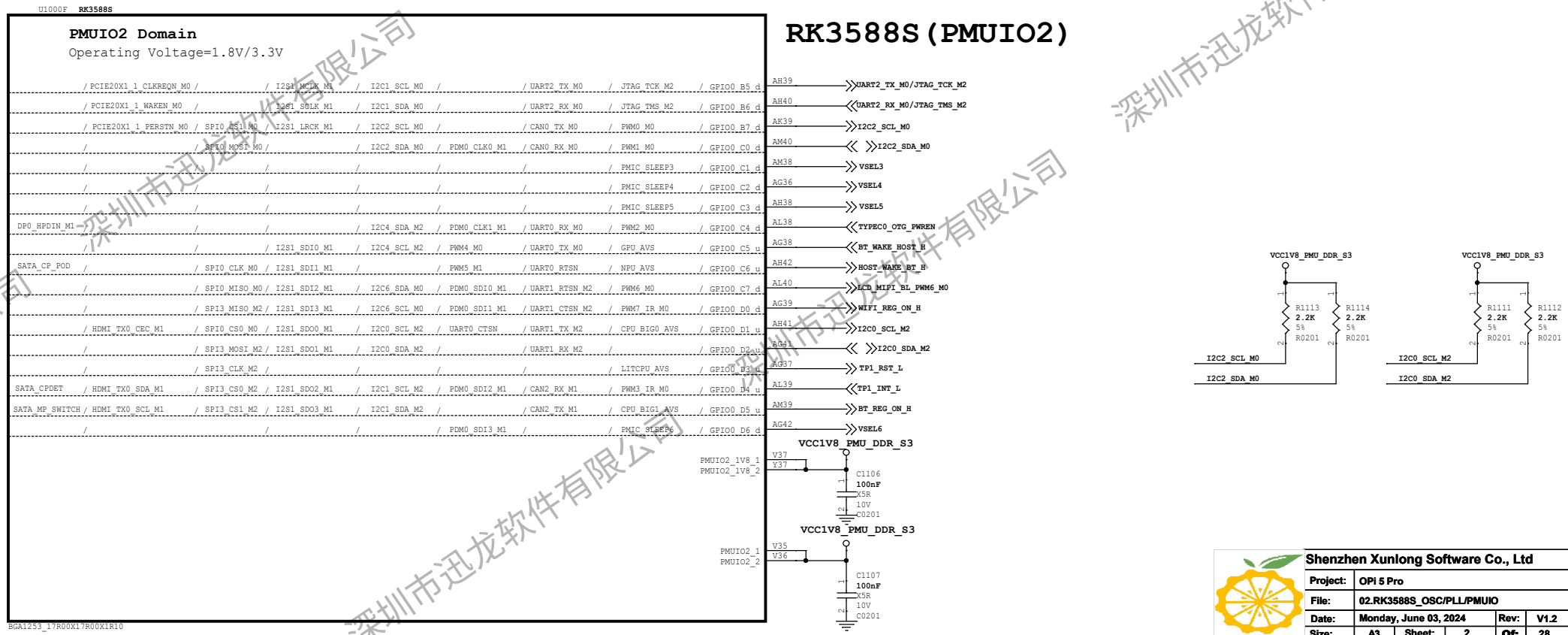

Shenzhen Xunlong Software Co., Ltd					
Project:	OPi 5 Pro				
File:	02.RK3588S_OSC/PLL/PMUIO				
Date:	Monday, June 03, 2024			Rev:	V1.2
Size:	A3	Sheet:	2	Of:	28

深圳市迅龙软件有限公司

RK3588S(DDR PHY)

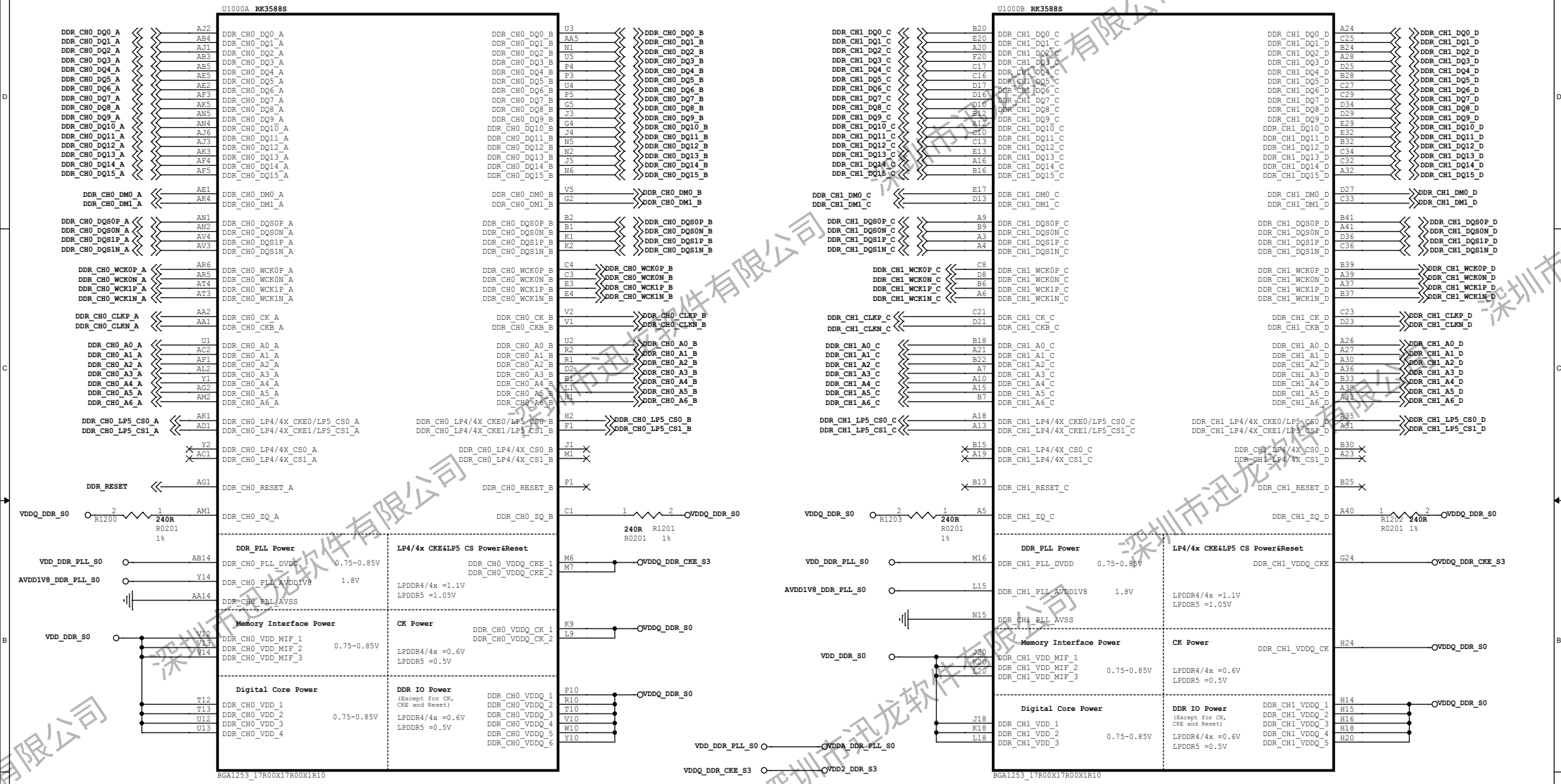

DDR FILTER

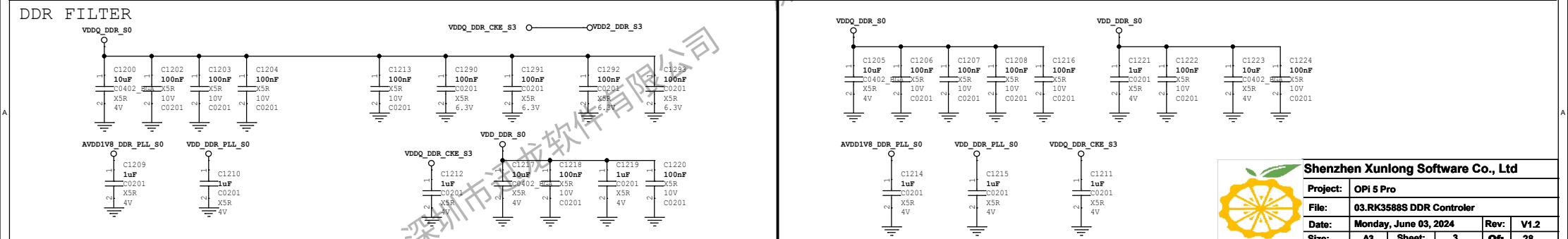

深圳市迅龙软件有限公司

Shenzhen Xunlong Software Co., Ltd			
Project:	OPi 5 Pro		
File:	03.RK3588S DDR Controler		
Date:	Monday, June 03, 2024	Rev:	V1.2
Size:	A3	Sheet: 3	Of: 28

RK3588S(EMMCIO Domain)

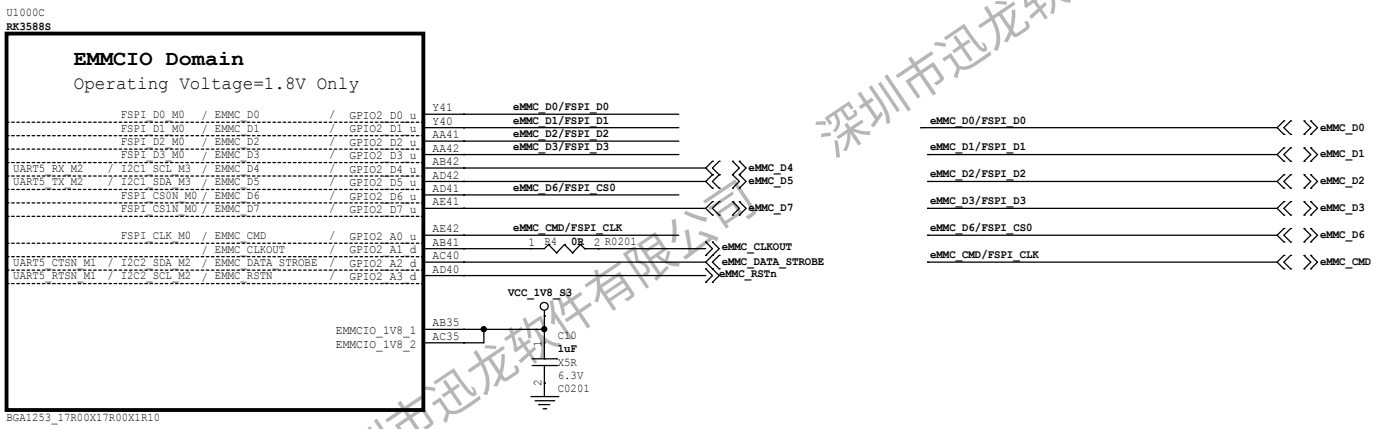

RK3588S(VCCIO2 Domain)

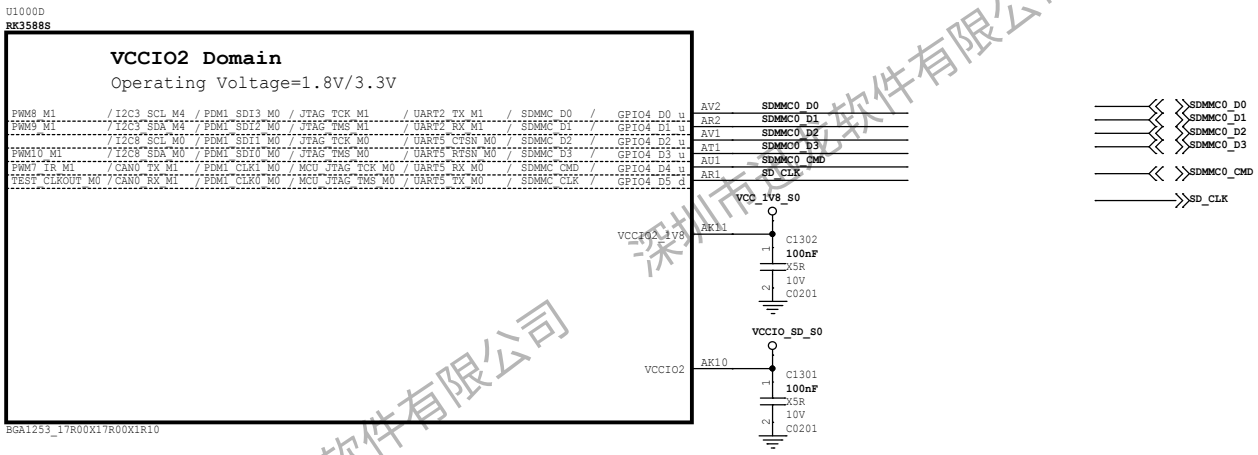

Shenzhen Xunlong Software Co., Ltd					
Project:	OPi 5 Pro				
File:	04.RK3588S Flash/SD Controller				
Date:	Monday, June 03, 2024			Rev:	V1.2
Size:	A3	Sheet:	4	Of:	28

深圳市迅龙软件有限公司

RK3588S(USB3.0/DP1.4)

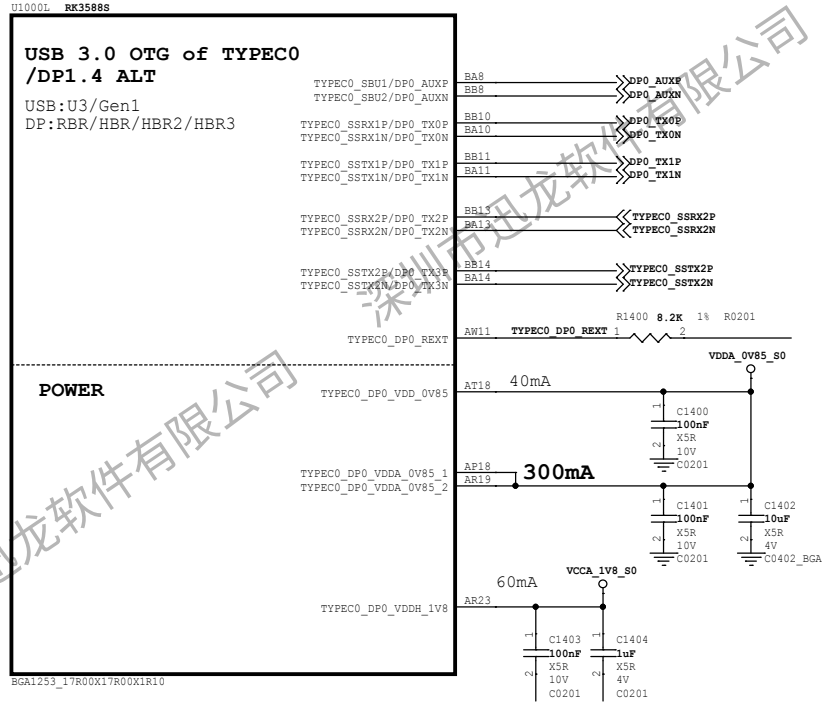

RK3588S(USB2.0)

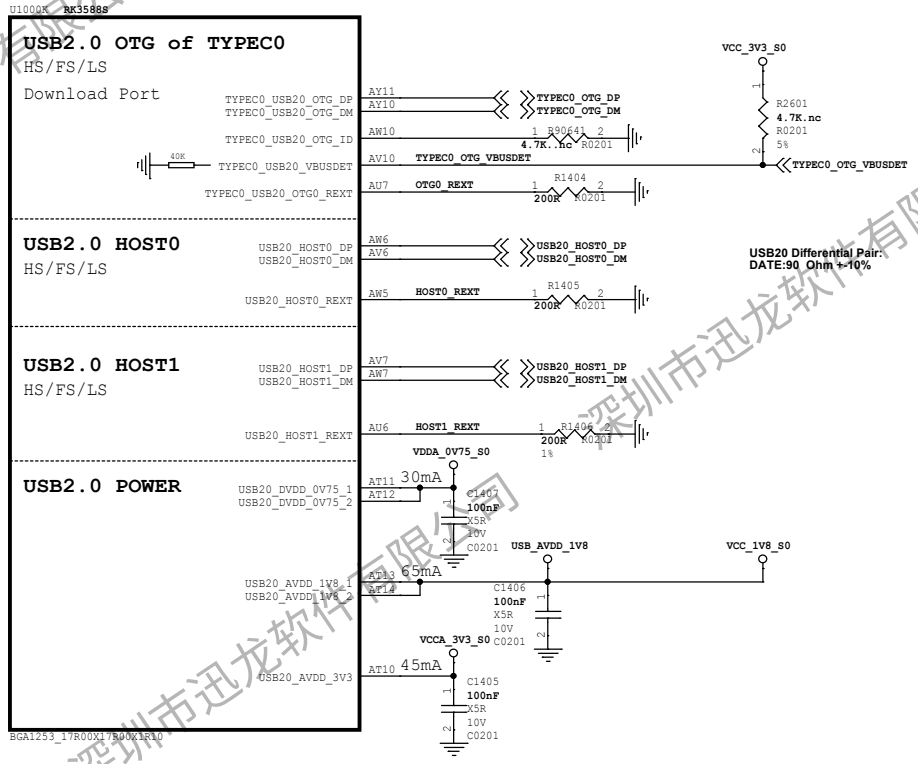

Shenzhen Xunlong Software Co., Ltd				
Project:	OPi 5 Pro			
File:	05.RK3588S_USB20/USB30/DP PHY			
Date:	Monday, June 03, 2024		Rev:	V1.2
Size:	A3	Sheet: 5	Of:	28

深圳市迅龙软件有限公司

RK3588S(SARADC/OTP/TSADC)

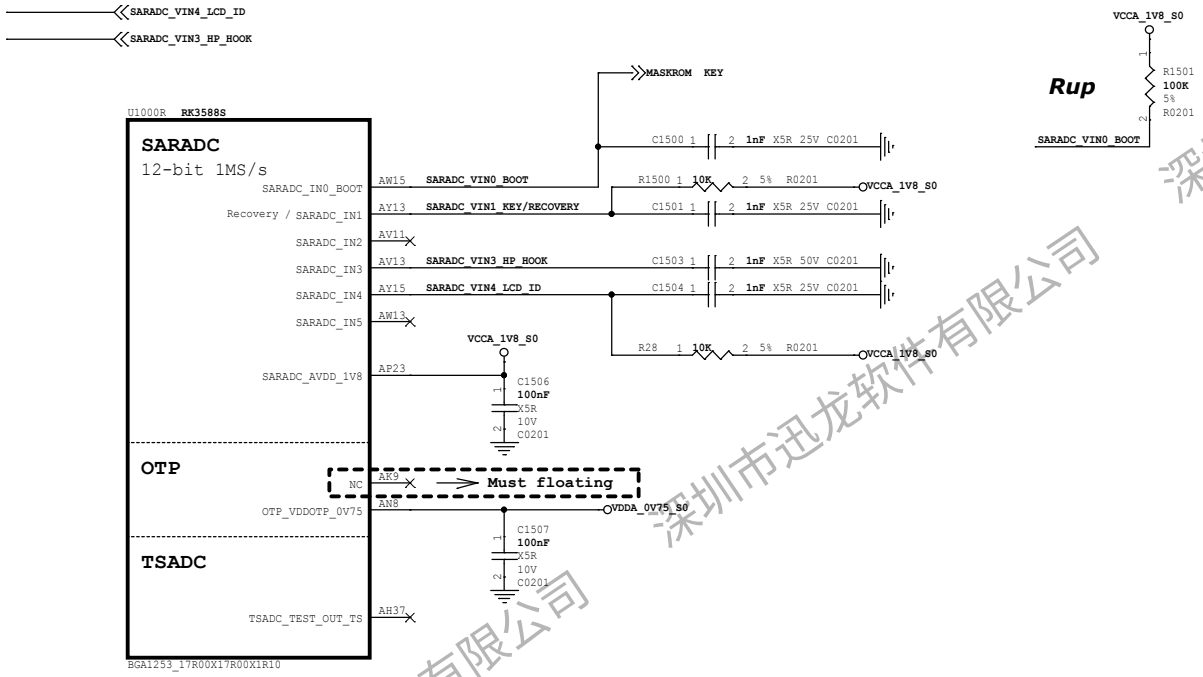

RK3588S(VCCIO1 Domain)

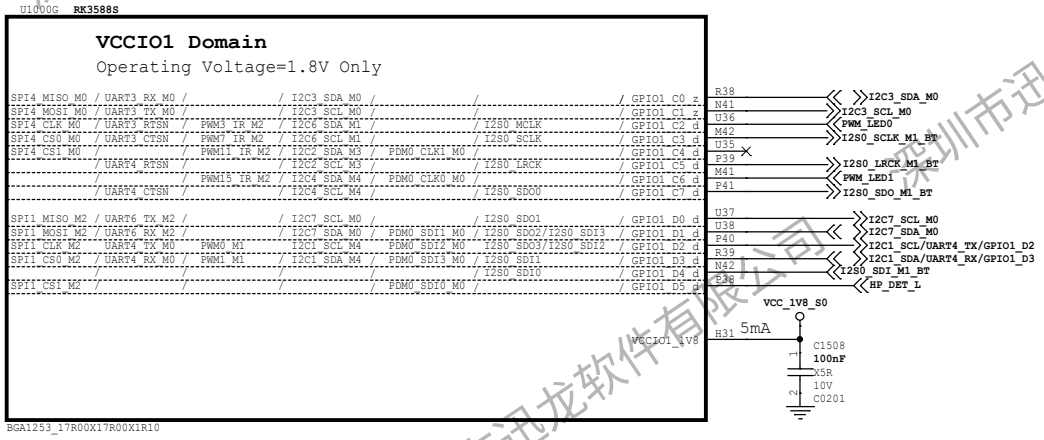

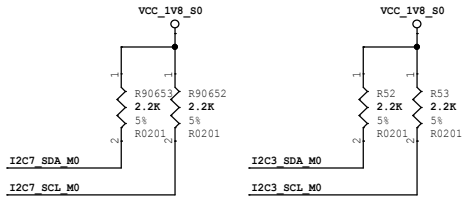

Shenzhen Xunlong Software Co., Ltd					
Project:	OPi 5 Pro				
File:	06.RK3588S_SARADC/1.8V GPIO				
Date:	Monday, June 03, 2024			Rev:	V1.2
Size:	A3	Sheet:	6	Of:	28

深圳市迅龙软件有限公司

RK3588S(MIPI_CSI)

U1000N

MIPI DPHY CSI_RX Port0

MIPI V1.2
2.5Gbps

MIPI_CSI0_CLK0P — AN42 — MIPI_CSI0_RX_CLK0P
MIPI_CSI0_CLK0N — AN41 — MIPI_CSI0_RX_CLK0N
MIPI_CSI0_D0P — AL42 — MIPI_CSI0_RX_D0P
MIPI_CSI0_D0N — AL41 — MIPI_CSI0_RX_D0N
MIPI_CSI0_D1P — AK41 — MIPI_CSI0_RX_D1P
MIPI_CSI0_D1N — AK42 — MIPI_CSI0_RX_D1N
MIPI_CSI0_CLK1P — AU41
MIPI_CSI0_CLK1N — AU42
MIPI_CSI0_D2P — AT41 — MIPI_CSI0_RX_D2P
MIPI_CSI0_D2N — AT42 — MIPI_CSI0_RX_D2N
MIPI_CSI0_D3P — AP42 — MIPI_CSI0_RX_D3P
MIPI_CSI0_D3N — AP41 — MIPI_CSI0_RX_D3N

MIPI_CSI0_AVCC0V75 — AM37 — VDDA_0V75_S0
C1602 100nF X5R 10V C0201
C1603 1uF X5R 4V C0201

MIPI_CSI0_AVCC1V8 — AM35 — VCCA_1V8_S0
C1600 1uF X5R 4V C0201
C1601 100nF X5R 10V C0201

RK3588S
BGA1253_17R00X17R00X1R10

MIPI CSI_RX:
100 Ohm ±10%

RK3588S(MIPI_D/C PHY)

MIPI DPHY:
100 Ohm ±10%
MIPI CPHY:
50 Ohm ±10%

U1000O

MIPI D/C-PHY DSI_TX Port0

D-PHY:V2.0
4.5Gbps/Lane

C-PHY:V1.1
5.7Gbps/Trio

MIPI_DPHY0_TX_CLKP/MIPI_CPHY0_TX_TRIO1_C — BB34
MIPI_DPHY0_TX_CLKN/MIPI_CPHY0_TX_TRIO1_B — BA34
MIPI_DPHY0_TX_D0P/MIPI_CPHY0_TX_TRIO0_B — BB31
MIPI_DPHY0_TX_D0N/MIPI_CPHY0_TX_TRIO0_A — BA31
MIPI_DPHY0_TX_D1P/MIPI_CPHY0_TX_TRIO1_A — BA32
MIPI_DPHY0_TX_D1N/MIPI_CPHY0_TX_TRIO0_C — BB32
MIPI_DPHY0_TX_D2P/MIPI_CPHY0_TX_TRIO2_B — BA35
MIPI_DPHY0_TX_D2N/MIPI_CPHY0_TX_TRIO2_A — BB35
MIPI_DPHY0_TX_D3P/NO_USE — BB37
MIPI_DPHY0_TX_D3N/MIPI_CPHY0_TX_TRIO2_C — BA37

MIPI D/C-PHY CSI_RX Port0

D-PHY:V2.0
4.5Gbps/Lane

C-PHY:V1.1
5.7Gbps/Trio

MIPI_DPHY0_RX_CLKP/MIPI_CPHY0_RX_TRIO1_C — BB41 — MIPI_DPHY0_RX_CLKP
MIPI_DPHY0_RX_CLKN/MIPI_CPHY0_RX_TRIO1_B — BA41 — MIPI_DPHY0_RX_CLKN
MIPI_DPHY0_RX_D0P/MIPI_CPHY0_RX_TRIO0_B — BA38 — MIPI_DPHY0_RX_D0P
MIPI_DPHY0_RX_D0N/MIPI_CPHY0_RX_TRIO0_A — BB38 — MIPI_DPHY0_RX_D0N
MIPI_DPHY0_RX_D1P/MIPI_CPHY0_RX_TRIO1_A — BA40 — MIPI_DPHY0_RX_D1P
MIPI_DPHY0_RX_D1N/MIPI_CPHY0_RX_TRIO0_C — AY40 — MIPI_DPHY0_RX_D1N
MIPI_DPHY0_RX_D2P/MIPI_CPHY0_RX_TRIO2_B — AY42 — MIPI_DPHY0_RX_D2P
MIPI_DPHY0_RX_D2N/MIPI_CPHY0_RX_TRIO2_A — BA42 — MIPI_DPHY0_RX_D2N
MIPI_DPHY0_RX_D3P/NO_USE — AW41 — MIPI_DPHY0_RX_D3P
MIPI_DPHY0_RX_D3N/MIPI_CPHY0_RX_TRIO2_C — AW42 — MIPI_DPHY0_RX_D3N

Power

MIPI_D/C_PHY0_VREG — AT33 — MIPI_D/C_PHY0_VREG
C1604 1uF X5R 4V C0201

MIPI_D/C_PHY0_VDD — AR33 — VDDA_0V75_S0
C1605 1uF X5R 4V C0201
C1611 100nF X5R 10V C0201

MIPI_D/C_PHY_VDD_1V2_1 — AR34 — VDDA_1V2_S0
C1607 100nF X5R 10V C0201

MIPI_D/C_PHY_VDD_1V8_1 — AR30 — VCCA_1V8_S0
C1609 100nF X5R 10V C0201

RK3588S
BGA1253_17R00X17R00X1R10

U1000P

MIPI D/C-PHY DSI_TX Port1

D-PHY:V2.0
4.5Gbps/Lane

C-PHY:V1.1
5.7Gbps/Trio

MIPI_DPHY1_TX_CLKP/MIPI_CPHY1_TX_TRIO1_C — BB19 — MIPI_DPHY1_TX_CLKP
MIPI_DPHY1_TX_CLKN/MIPI_CPHY1_TX_TRIO1_B — BA19 — MIPI_DPHY1_TX_CLKN
MIPI_DPHY1_TX_D0P/MIPI_CPHY1_TX_TRIO0_B — BB16 — MIPI_DPHY1_TX_D0P
MIPI_DPHY1_TX_D0N/MIPI_CPHY1_TX_TRIO0_A — BA16 — MIPI_DPHY1_TX_D0N
MIPI_DPHY1_TX_D1P/MIPI_CPHY1_TX_TRIO1_A — BA17 — MIPI_DPHY1_TX_D1P
MIPI_DPHY1_TX_D1N/MIPI_CPHY1_TX_TRIO0_C — BB17 — MIPI_DPHY1_TX_D1N
MIPI_DPHY1_TX_D2P/MIPI_CPHY1_TX_TRIO2_B — BA20 — MIPI_DPHY1_TX_D2P
MIPI_DPHY1_TX_D2N/MIPI_CPHY1_TX_TRIO2_A — BB20 — MIPI_DPHY1_TX_D2N
MIPI_DPHY1_TX_D3P/NO_USE — BB22 — MIPI_DPHY1_TX_D3P
MIPI_DPHY1_TX_D3N/MIPI_CPHY1_TX_TRIO2_C — BA22 — MIPI_DPHY1_TX_D3N

MIPI D/C-PHY CSI_RX Port1

D-PHY:V2.0
4.5Gbps/Lane

C-PHY:V1.1
5.7Gbps/Trio

MIPI_DPHY1_RX_CLKP/MIPI_CPHY1_RX_TRIO1_C — BA26
MIPI_DPHY1_RX_CLKN/MIPI_CPHY1_RX_TRIO1_B — BB26
MIPI_DPHY1_RX_D0P/MIPI_CPHY1_RX_TRIO0_B — BA23
MIPI_DPHY1_RX_D0N/MIPI_CPHY1_RX_TRIO0_A — BB23
MIPI_DPHY1_RX_D1P/MIPI_CPHY1_RX_TRIO1_A — BB25
MIPI_DPHY1_RX_D1N/MIPI_CPHY1_RX_TRIO0_C — BA25
MIPI_DPHY1_RX_D2P/MIPI_CPHY1_RX_TRIO2_B — BB28
MIPI_DPHY1_RX_D2N/MIPI_CPHY1_RX_TRIO2_A — BA28
MIPI_DPHY1_RX_D3P/NO_USE — BA29
MIPI_DPHY1_RX_D3N/MIPI_CPHY1_RX_TRIO2_C — BB29

Power

MIPI_D/C_PHY1_VREG — AT27 — MIPI_D/C_PHY1_VREG
C1612 1uF X5R 4V C0201

MIPI_D/C_PHY1_VDD — AR27 — VDDA_0V75_S0
130mA
C1613 1uF X5R 4V C0201
C1614 100nF X5R 10V C0201

MIPI_D/C_PHY_VDD_1V2_2 — AR35 — VDDA_1V2_S0
4mA
C1608 100nF X5R 10V C0201

MIPI_D/C_PHY_VDD_1V8_2 — AT30 — VCCA_1V8_S0
35mA
C1610 100nF X5R 10V C0201

RK3588S
BGA1253_17R00X17R00X1R10

Shenzhen Xunlong Software Co., Ltd				
Project:	OPi 5 Pro			
File:	07.RK3588S_MIPI Interface			
Date:	Monday, June 03, 2024		Rev:	V1.2
Size:	A3	Sheet: 7	Of:	28

深圳市迅龙软件有限公司

RK3588S(HDMI2.1 TX/eDP1.3 TX)

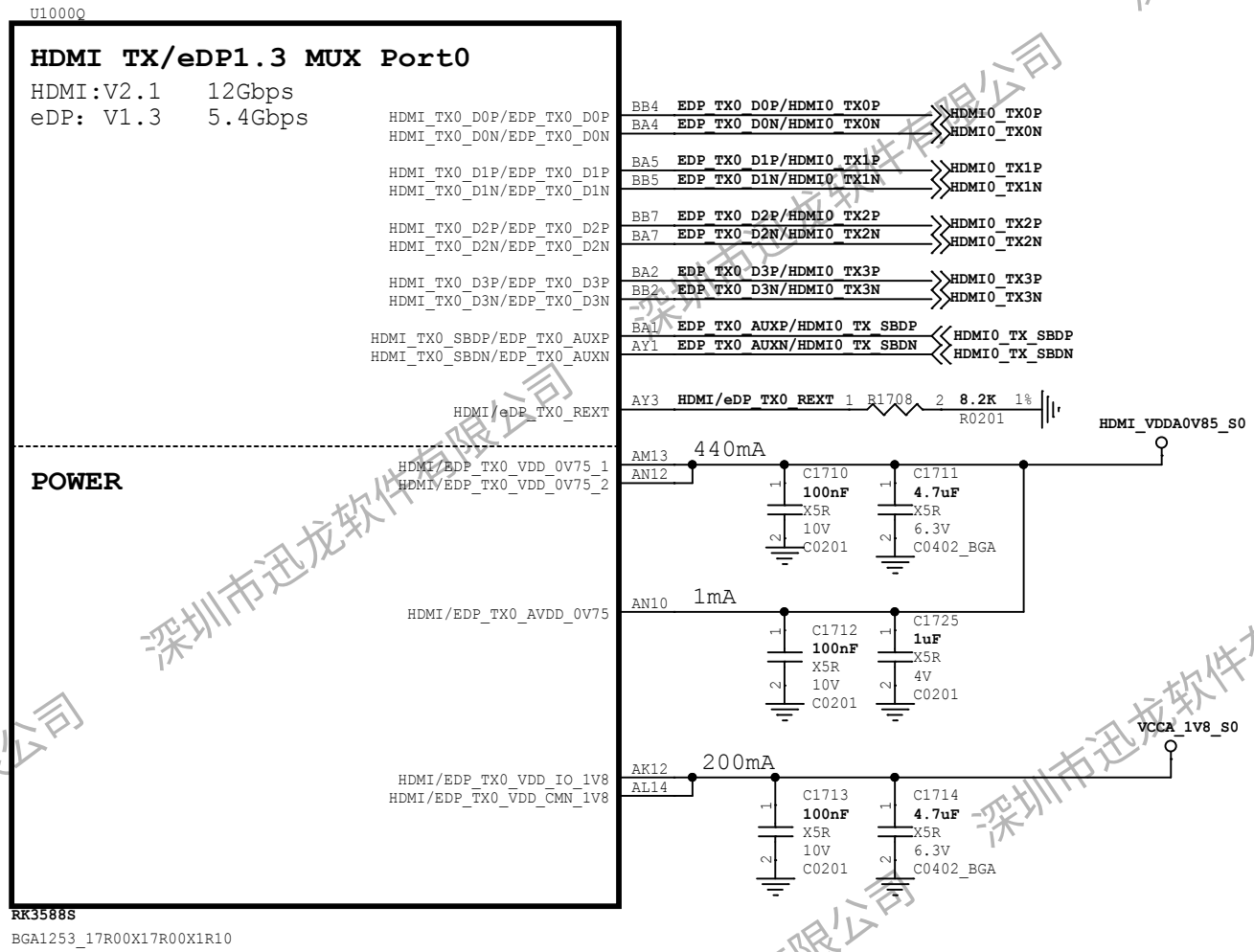

Shenzhen Xunlong Software Co., Ltd					
Project:	OPi 5 Pro				
File:	08.RK3588S_HDMI/eDP Interface				
Date:	Monday, June 03, 2024			Rev:	V1.2
Size:	A3	Sheet:	8	Of:	28

深圳市迅龙软件有限公司

RK3588S(PCIE20/SATA30/USB30)

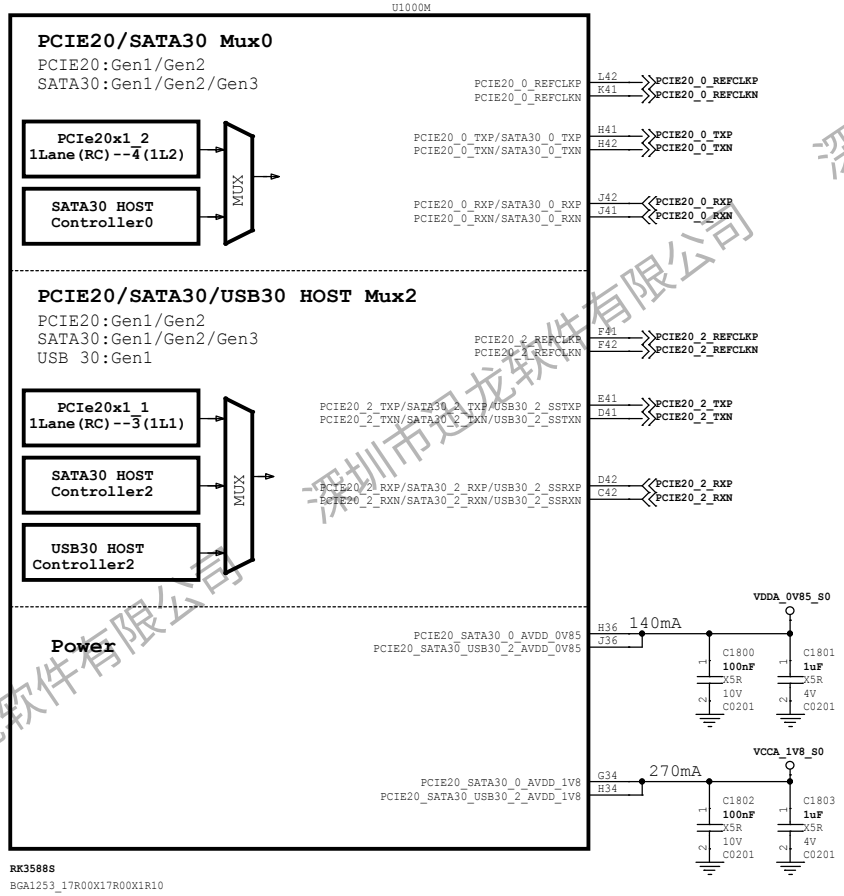

PCIe2.0 PHY

深圳市迅龙软件有限公司

Shenzhen Xunlong Software Co., Ltd					
Project:	OPi 5 Pro				
File:	09.RK3588S PCIE2/SATA3/USB3 PHY				
Date:	Monday, June 03, 2024			Rev:	V1.2
Size:	A3	Sheet:	9	Of:	28

RK3588S(VCCIO4 Domain)

U1000H

VCCIO4 Domain
Operating Voltage=1.8V/3.3V

PCIE20X1_1_CLKREQN_M2	SPI0_HPDIN_M2	UART6_RX_M1	SPI4_MISO_M2	I2C2_SDA_M4	GPIO1_A0_d	G40	UART6_RX/GPIO1_A0
PCIE20X1_1_WAKEN_M2		UART6_TX_M1	SPI4_MOSI_M2	I2C2_SCL_M4	GPIO1_A1_d	L40	UART6_TX/GPIO1_A1
PWM0_M2	VOP_POST_EMPTY	UART6_RTSN_M1	SPI4_CLK_M2	I2C4_SDA_M3	GPIO1_A2_d	D38	PWM0/I2C4_SDA/GPIO1_A2
PWM1_M2		UART6_CTSN_M1	SPI4_CS0_M2	I2C4_SCL_M3	GPIO1_A3_d	L39	PWM1/I2C4_SCL/GPIO1_A3
			SPI2_MISO_M0		GPIO1_A4_d	G37	GPIO1_A4
	HDMI_TX0_HPD_M0		SPI2_MOSI_M0		GPIO1_A5_d	M40	HDMI_TX0_HPD_M0
			SPI2_CLK_M0		GPIO1_A6_d	D39	GPIO1_A6
PWM3_IR_M3	PCIE20X1_1_PERSTN_M2		SPI2_CS0_M0	PDM1_SDI0_M1	GPIO1_A7_u	H38	PWM3/GPIO1_A7
			SPI2_CS1_M0	PDM1_SDI1_M1	GPIO1_B0_u	H39	GPIO1_B0
			SPI0_MISO_M2	PDM1_SDI2_M1	GPIO1_B1_d	G39	SPI0_MISO/GPIO1_B1
		UART4_RX_M2	SPI0_MOSI_M2	PDM1_SDI3_M1	GPIO1_B2_d	M38	SPI0_MOSI/GPIO1_B2
	SATA0_ACT_LED_M1	UART4_TX_M2	SPI0_CLK_M2	PDM1_CLK1_M1	GPIO1_B3_d	M37	SPI0_CLK/GPIO1_B3
		UART7_RX_M2	SPI0_CS0_M2	PDM1_CLK0_M1	GPIO1_B4_u	M39	SPI0_CS0/GPIO1_B4
		UART7_TX_M2	SPI0_CS1_M2		GPIO1_B5_u	D40	SPI0_CS1/GPIO1_B5
	MIPI_CAMERA1_CLK_M0	UART1_TX_M1	SPDIF0_TX_M0	I2C5_SCL_M3	GPIO1_B6_u	L38	UART1_TX/I2C5_SCL/GPIO1_B6
PWM13_M2	SATA2_ACT_LED_M1	MIPI_CAMERA2_CLK_M0	UART1_RX_M1	SPDIF1_TX_M0	I2C5_SDA_M3	GPIO1_B7_u	F37	PWM13/UART1_RX/I2C5_SDA/GPIO1_B7
PWM14_M2		MIPI_CAMERA3_CLK_M0	UART1_RTSN_M1		I2C8_SCL_M2	GPIO1_D6_u	L37	PWM14/UART1_RTSN/I2C8_SCL/GPIO1_D6
PWM15_IR_M3		MIPI_CAMERA4_CLK_M0	UART1_CTSN_M1		I2C8_SDA_M2	GPIO1_D7_u	G38	PWM15/UART1_CTSN/I2C8_SDA/GPIO1_D7

VCC_1V8_S0
VCCIO4_1V8_1 G27
VCCIO4_1V8_2 G28
C1902 100nF X5R 10V C0201

VCC_3V3_S0
VCCIO4 G31
C1903 100nF X5R 10V C0201

RK3588S
BGA1253_17R00X17R00X1R10

RK3588S(VCCIO6 Domain)

U1000J

VCCIO6 Domain
Operating Voltage=1.8V/3.3V

BT1120_D0	CIF_D0		I2S1_MCLK_M0	UART9_RTSN_M1	SPI0_MISO_M1	PCIE20X1_1_CLKREQN_M1	GPIO4_A0_d	AV19	PCIE20x1_1_CLKREQn_M1
BT1120_D1	CIF_D1		I2S1_SCLK_M0	UART9_CTSN_M1	SPI0_MOSI_M1	PCIE20X1_1_WAKEN_M1	GPIO4_A1_d	AW18	PCIE20x1_1_WAKEn_M1
BT1120_D2	CIF_D2		I2S1_LRCK_M0		SPI0_CLK_M1	PCIE20X1_1_PERSTN_M1	GPIO4_A2_d	AV26	PCIE20x1_1_PERSTn_M1
BT1120_D3	CIF_D3			UART0_TX_M2			GPIO4_A3_d	AV19	UART0_TX/GPIO4_A3
BT1120_D4	CIF_D4			UART0_RX_M2	SPI2_MISO_M1	I2C3_SCL_M2	GPIO4_A4_d	AW19	SPI2_MISO/UART0_RX/GPIO4_A4
BT1120_D5	CIF_D5		I2S1_SDI0_M0	UART3_TX_M2	SPI2_MOSI_M1	I2C3_SDA_M2	GPIO4_A5_d	AU15	SPI2_MOSI/GPIO4_A5
BT1120_D6	CIF_D6		I2S1_SDI1_M0	UART3_RX_M2	SPI2_CLK_M1	I2C5_SCL_M2	GPIO4_A6_d	AV18	SPI2_CLK/I2C5_SCL/GPIO4_A6
BT1120_D7	CIF_D7		I2S1_SDI2_M0		SPI2_CS0_M1	I2C5_SDA_M2	GPIO4_A7_d	AW26	SPI2_CS0/I2C5_SDA/GPIO4_A7
BT1120_CLKOUT	CIF_CLKIN		I2S1_SDI3_M0	UART8_TX_M0	SPI2_CS1_M1	I2C6_SDA_M3	GPIO4_B0_d	AW27	I2C6_SDA_M3
SPDIF1_TX_M1	MIPI_CAMERA0_CLK_M0 / SATA2_ACT_LED_M0		I2S1_SDO0_M0	UART8_RX_M0	SPI0_CS1_M1	I2C6_SCL_M3	GPIO4_B1_u	AU22	I2C6_SCL_M3
CAN1_RX_M1	BT1120_D8	CIF_HREF	PWM14_M1	I2S1_SDO1_M0	UART8_RTSN_M0	SPI0_CS0_M1	I2C7_SCL_M3	PCIE20X1_1_BUTTON_RSTN	GPIO4_B2_u	AT15	CAN1_RX_M1/GPIO4_B2
CAN1_TX_M1	BT1120_D9	CIF_VSYNC	PWM15_IR_M1	I2S1_SDO2_M0	UART8_CTSN_M0	I2C7_SDA_M3	PCIE20X1_2_BUTTON_RSTN	GPIO4_B3_u	AV23	CAN1_TX_M1/GPIO4_B3
BT1120_D10	CIF_CLKOUT	PWM11_IR_M1	I2S1_SDO3_M0	UART9_TX_M1	DP0_HPDIN_M0	SPDIF0_TX_M1	GPIO4_B4_u	AV27	DP_HPDIN
BT1120_D11		PWM12_M1		UART9_RX_M1	SPI3_MISO_M1		GPIO4_B5_d	AU23	PHONE_CTL
BT1120_D12		PWM13_M1			SPI3_MOSI_M1	I2C5_SCL_M1	SATA0_ACT_LED_M0	GPIO4_B6_d	AW22	HDMI0_TX_ON_H
BT1120_D13			HDMI_TX0_SCL_M0		SPI3_CLK_M1	I2C5_SDA_M1	PCIE20X1_2_CLKREQN_M1	GPIO4_B7_u	AV22	HDMI_TX0_SCL_M0
BT1120_D14			HDMI_TX0_SDA_M0		SPI3_CS0_M1	I2C9_SCL_M3	PCIE20X1_2_WAKEN_M1	GPIO4_C0_u	AW23	HDMI_TX0_SDA_M0
BT1120_D15	SPDIF1_TX_M2	PWM6_M1	HDMI_TX0_CEC_M0		SPI3_CS1_M1	I2C8_SDA_M3	PCIE20X1_2_PERSTN_M1	GPIO4_C1_d	AV26	HDMI_TX0_CEC_M0

Note:
BT1120 Only Support Output

VCC_1V8_S0
VCCIO6_1V8 AJ34
C1906 100nF X5R 10V C0201

VCC_3V3_S0
VCCIO6_1 AW33
VCCIO6_2 AW32
C1907 100nF X5R 10V C0201

RK3588S
BGA1253_17R00X17R00X1R10

VCC_3V3_S0
R1914 2.2K 5% R0201
R1915 2.2K 5% R0201
I2C6_SCL_M3
I2C6_SDA_M3

RK3588S(VCCIO5 Domain)

U1000I

VCCIO5 Domain
Operating Voltage=1.8V/3.3V

PWM10_M0	SPI4_MISO_M1 / I2C6_SDA_M4	GMAC1_TXD2	I2S3_MCLK	FSPI_D0_M2	SDIO_D0_M1	GPIO3_A0_u	AR38	SDIO_D0
AUDDSM_LN / PWM11_IR_M0	SPI4_MOSI_M1 / I2C6_SCL_M4	GMAC1_TXD3	I2S3_SCLK	FSPI_D1_M2	SDIO_D1_M1	GPIO3_A1_u	AR37	SDIO_D1
AUDDSM_LP / UART8_TX_M1	SPI4_CLK_M1	GMAC1_RXD2	I2S3_LRCK	FSPI_D2_M2	SDIO_D2_M1	GPIO3_A2_u	AT38	SDIO_D2
AUDDSM_RN / UART8_RX_M1	SPI4_CS0_M1	GMAC1_RXD3	I2S3_SDO	FSPI_D3_M2	SDIO_D3_M1	GPIO3_A3_u	AT40	SDIO_D3
AUDDSM_RP / UART8_RTSN_M1	SPI4_CS1_M1	GMAC1_TXCLK	I2S3_SDI		SDIO_CMD_M1	GPIO3_A4_d	AT39	SDIO_CMD
UART8_CTSN_M1	I2C4_SDA_M0	GMAC1_RXCLK	FSPI_CLK_M2	MIPI_CAMERA0_CLK_M1	SDIO_CLK_M1	GPIO3_A5_d	AV38	SDIO_CLK
	I2C4_SCL_M0	ETHERNET_REF_CLK_25M		MIPI_CAMERA1_CLK_M1		GPIO3_A6_d	AV37	MIPI_CAM1_CLKOUT
		GMAC1_RXD0		MIPI_CAMERA2_CLK_M1	PWM8_M0	GPIO3_A7_u	AT37	MIPI_CAM1_RST_L
		GMAC1_RXD1		MIPI_CAMERA3_CLK_M1	PWM9_M0	GPIO3_B0_u	AR39	MIPI_CAM3_CLKOUT
UART2_TX_M2		GMAC1_RXDV_CRS		MIPI_CAMERA4_CLK_M1	PWM2_M1	GPIO3_B1_d	AV39	FAN_EN
UART2_RX_M2		GMAC1_TXER	I2S2_SDI_M1		PWM3_IR_M1	GPIO3_B2_d	AW34	I2S2_SDI_M1
UART2_RTSN		GMAC1_TXD0	I2S2_SDO_M1			GPIO3_B3_u	AW35	I2S2_SDO_M1
UART2_CTSN		GMAC1_TXD1	I2S2_MCLK_M1			GPIO3_B4_u	AV35	I2S2_MCLK_M1
UART1_TX_M1	CAN1_RX_M0	GMAC1_TXEN	I2S2_SCLK_M1		PWM12_M0	GPIO3_B5_u	AY35	I2S2_SCLK_M1
UART1_RX_M1	CAN1_TX_M0	GMAC1_MCLKINOUT	I2S2_LRCK_M1		PWM13_M0	GPIO3_B6_d	AW37	I2S2_LRCK_M1
	SPI1_MOSI_M1 / I2C3_SCL_M1	GMAC1_PTP_REF_CLK /				GPIO3_B7_d	AY34	Ethernet_EN
UART7_TX_M1	SPI1_MISO_M1 / I2C3_SDA_M1	GMAC1_PPSTRIG				GPIO3_C0_d	AR36	LCD_MIPI_RESET_1
UART7_RX_M1	SPI1_CLK_M1	GMAC1_PPSCLK				GPIO3_C1_d	AW38	LCD_MIPI_PWREN_H_1
UART7_RTSN_M1 / SPI1_CS0_M1	I2C8_SCL_M4	GMAC1_MDC		MIPI_TE0	PWM14_M0	GPIO3_C2_d	AV40	DP_EN
UART7_CTSN_M1 / SPI1_CS1_M1	I2C8_SDA_M4	GMAC1_MDIO		MIPI_TE1	PWM15_IR_M0	GPIO3_C3_d	AW39	MIPI_TE1
UART5_TX_M1 / SPI3_CS0_M0	CAN2_RX_M0 / CIF_D8			FSPI_CS0N_M2		GPIO3_C4_u	AU34	MIPI_CAM3_RST_L
UART5_RX_M1 / SPI3_CS1_M3	CAN2_TX_M0 / CIF_D9			FSPI_CS1N_M2		GPIO3_C5_u	AV34	MIPI_CAM1_PDN_L
	SPI3_MISO_M3	CIF_D10				GPIO3_C6_u	AV30	MIPI_CAM3_PDN_L
	SPI3_MOSI_M3 / I2C5_SCL_M0	CIF_D11	PCIE20X1_2_CLKREQN_M0	HDMI_TX0_SCL_M2		GPIO3_C7_u	AU30	PCIE20x1_2_CLKREQn_M0
UART4_RX_M1	SPI3_CLK_M3 / I2C5_SDA_M0	CIF_D12	PCIE20X1_2_WAKEN_M0	HDMI_TX0_SDA_M2	PWM8_M2	GPIO3_D0_u	AW31	PCIE20x1_2_WAKEn_M0
UART4_TX_M1	SPI0_MISO_M3	CIF_D13	PCIE20X1_2_PERSTN_M0		PWM9_M2	GPIO3_D1_d	AY27	PCIE20x1_2_PERSTn_M0
UART9_RTSN_M2 / SPI0_MOSI_M3	I2C7_SCL_M2	CIF_D14				GPIO3_D2_d	AY30	UART9_RTSN_M2_BT
UART9_CTSN_M2 / SPI0_CLK_M3	I2C7_SDA_M2	CIF_D15			PWM10_M2	GPIO3_D3_d	AY31	UART9_CTSN_M2_BT
UART9_RX_M2	SPI0_CS0_M3		MCU_JTAG_TCK_M1	HDMI_TX0_HPD_M1		GPIO3_D4_d	AV31	UART9_RX_M2_BT
UART9_TX_M2	SPI0_CS1_M3		MCU_JTAG_TMS_M1		PWM11_IR_M3	GPIO3_D5_d	AW30	UART9_TX_M2_BT

RESERVED AT45
VCCIO5_1V8 AF38
VCC_1V8_S0
C1904 100nF X5R 10V C0201

VCCIO5_1 AC33
VCCIO5_2 AC34
VCC_1V8_S0
C1905 100nF X5R 10V C0201

RK3588S
BGA1253_17R00X17R00X1R10

Shenzhen Xunlong Software Co., Ltd			
Project:	OPi 5 Pro		
File:	10.RK3588S GPIO		
Date:	Monday, June 03, 2024	Rev:	V1.2
Size: A3	Sheet: 10	Of:	28

深圳市迅龙软件有限公司

TPYE-C POWER IN

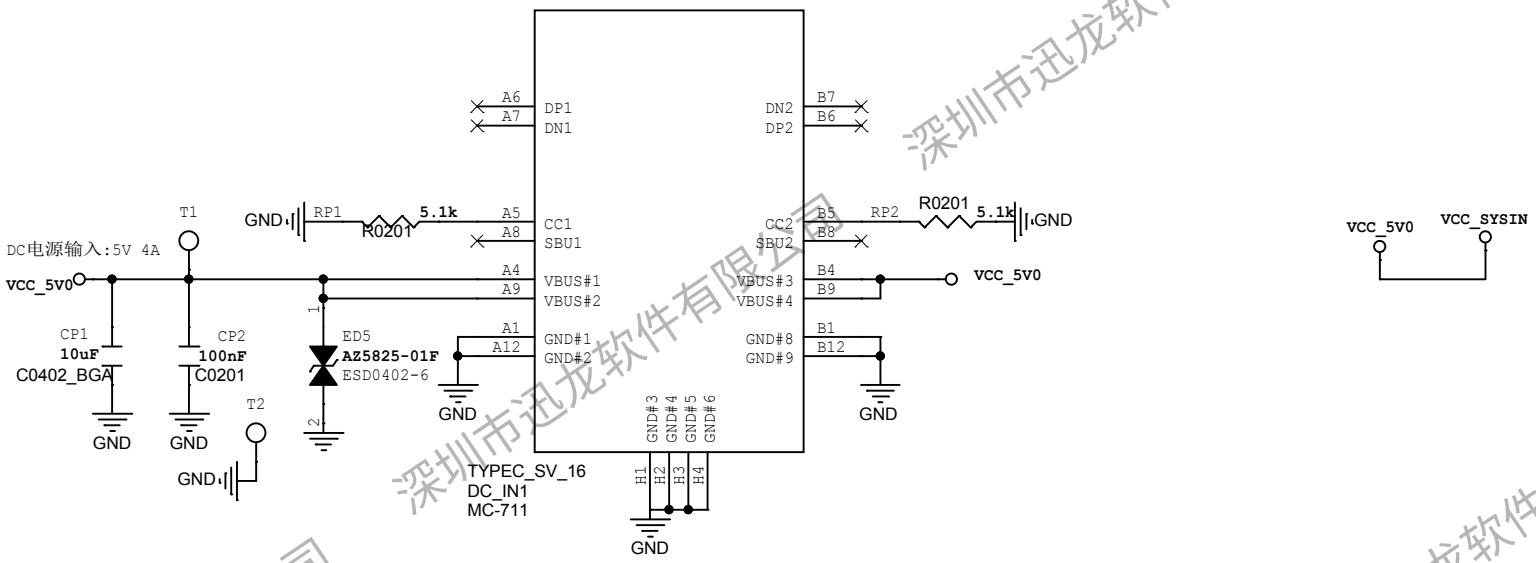

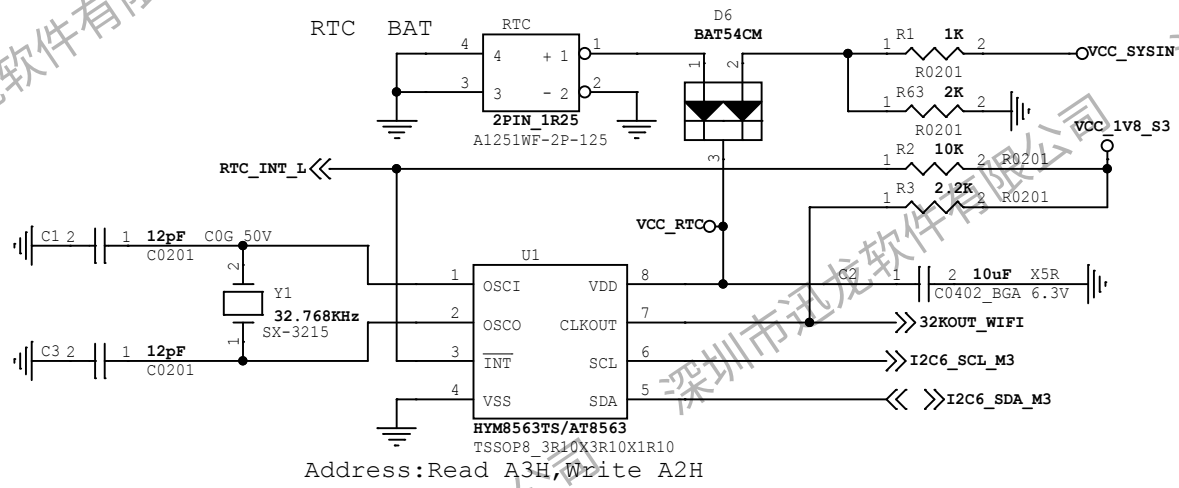

Address:Read A3H,Write A2H

深圳市迅龙软件有限公司

Shenzhen Xunlong Software Co., Ltd					
Project:	OPi 5 Pro				
File:	11.Power_Type-C RTC				
Date:	Monday, June 03, 2024			Rev:	V1.2
Size:	A3	Sheet:	11	Of:	28

PMIC1 RK806-1

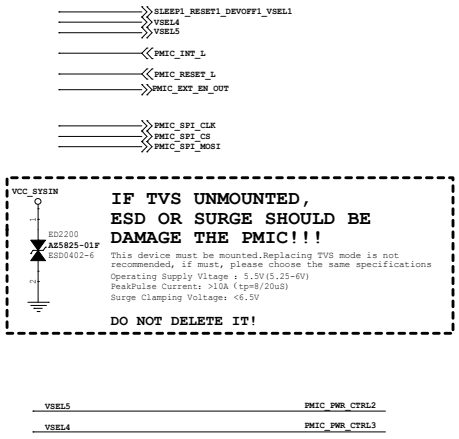

PMIC RK806-1 BUCK

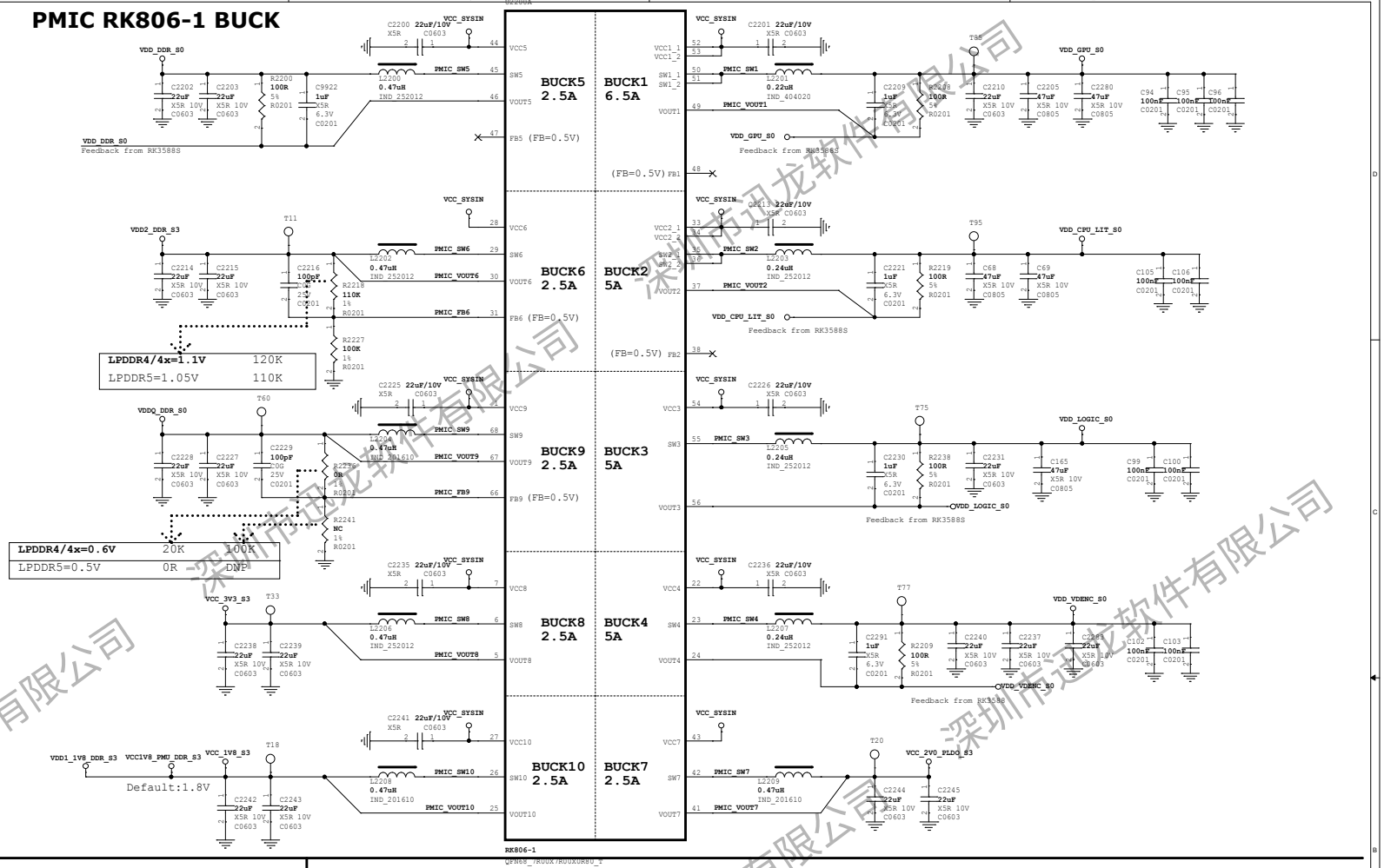

PMIC RK806-1 Managerment

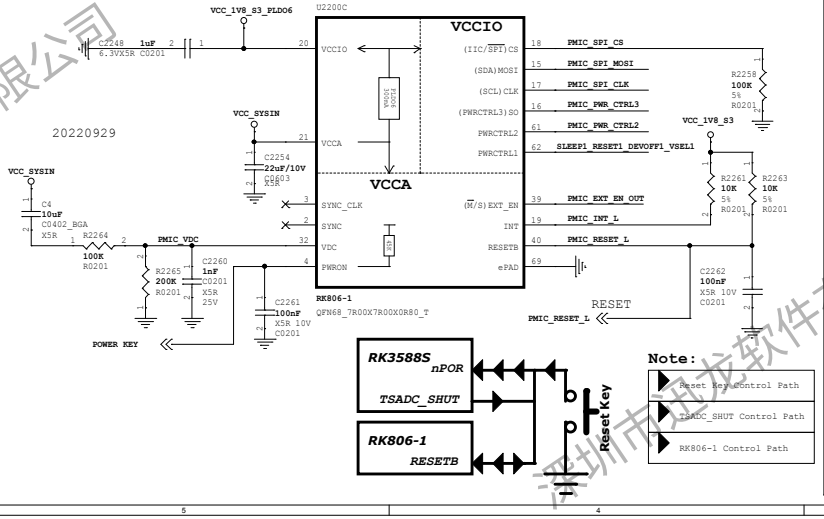

PMIC RK806-1 LDO

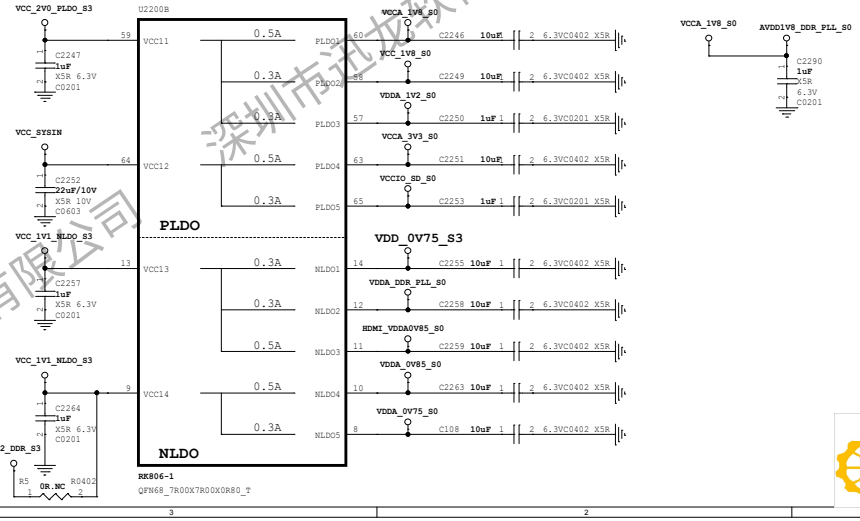

Shenzhen Xunlong Software Co., Ltd				
Project:	OPi 5 Pro			
File:	12.Power-PMIC_RK806-1			
Date:	Monday, June 03, 2024		Rev:	V1.2
Size:	A3	Sheet: 12	Of:	28

深圳市迅龙软件有限公司

VDD_CPU_BIG0

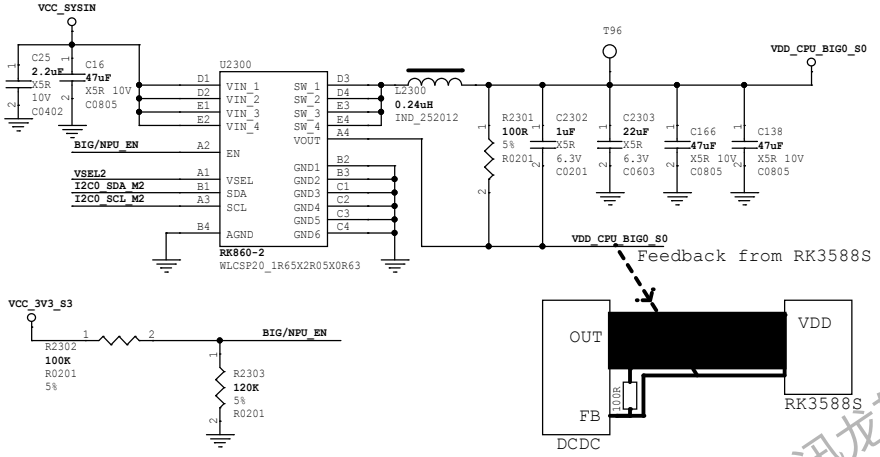

VDD_CPU_BIG1

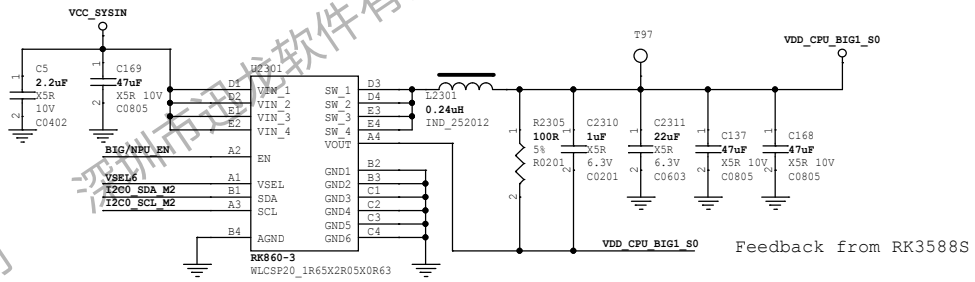

VDD_NPU

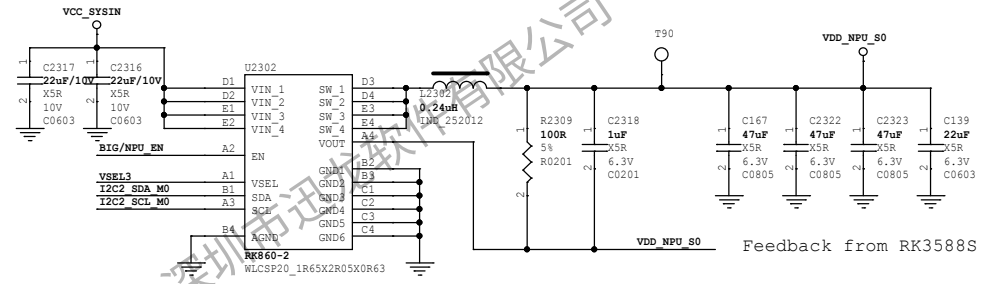

VCC_1V1_NLDO

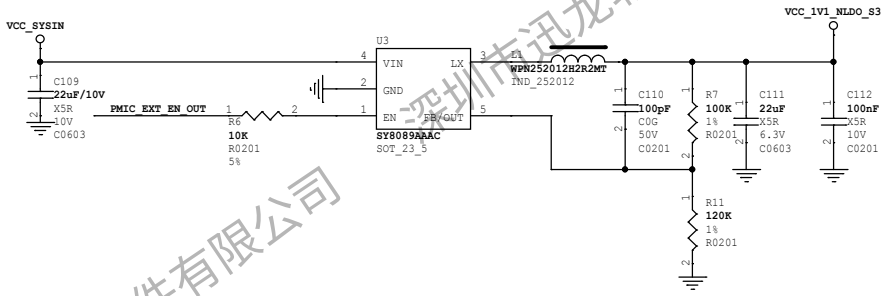

VCC_3V3_S0

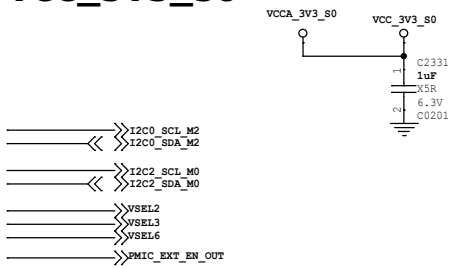

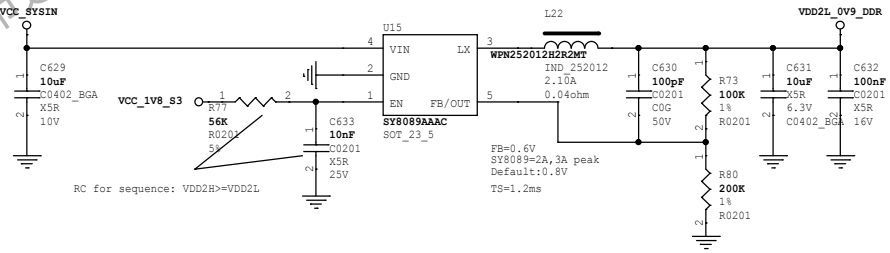

Shenzhen Xunlong Software Co., Ltd				
Project:	OPi 5 Pro			
File:	13.Power_Ext Discrete			
Date:	Monday, June 03, 2024		Rev:	V1.2
Size:	A3	Sheet: 13	Of:	28

深圳市迅龙软件有限公司

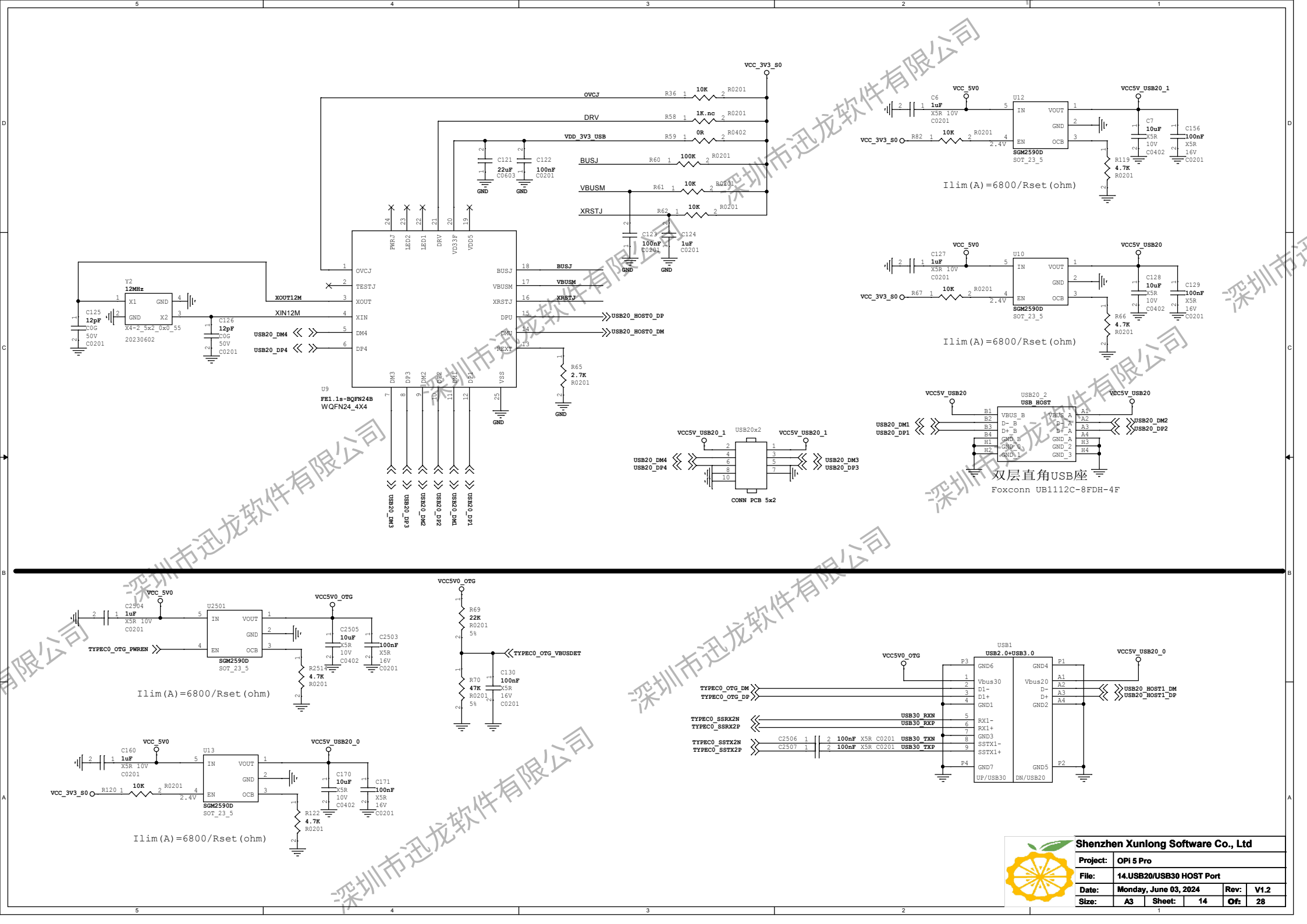

深圳市迅龙软件有限公司

DRAM-LPDDR5X_2X32bit

Power sequence: VDD1>VDD2H>=VDD2L>VDDQ-200mV

VDD1: 1.70V--1.95V
VDD2H:1.01V--1.12V
VDD2L:0.87V--0.97V
VDDQ: 0.47V--0.57V

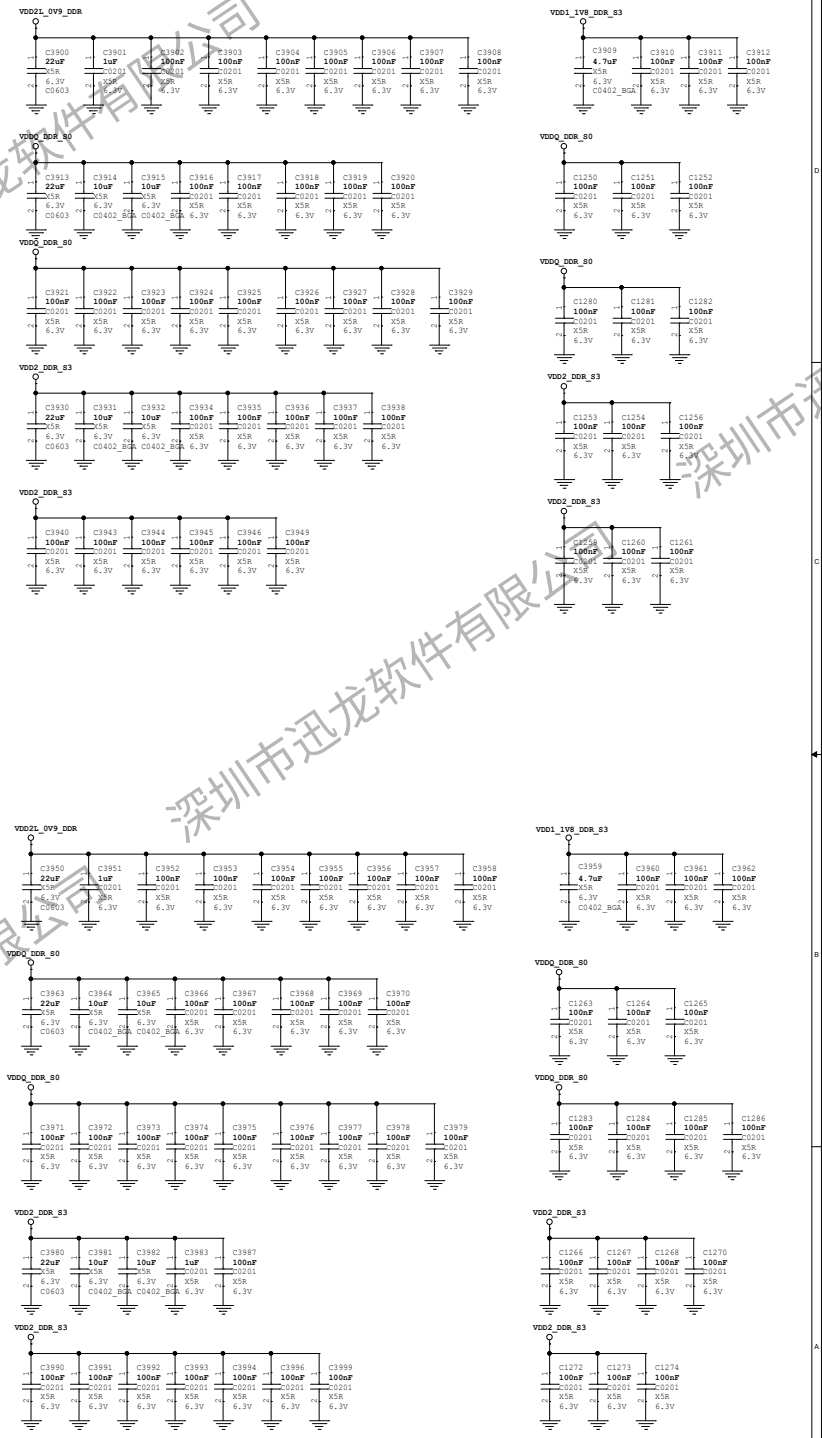

深圳市迅龙软件有限公司

Shenzhen Xunlong Software Co., Ltd			
Project:	OPi 5 Pro		
File:	15.DRAM-LPDDR5X_496P_2X32bit		
Date:	Monday, June 03, 2024	Rev:	V1.2
Size: A3	Sheet: 15	Of:	28

eMMC FLASH

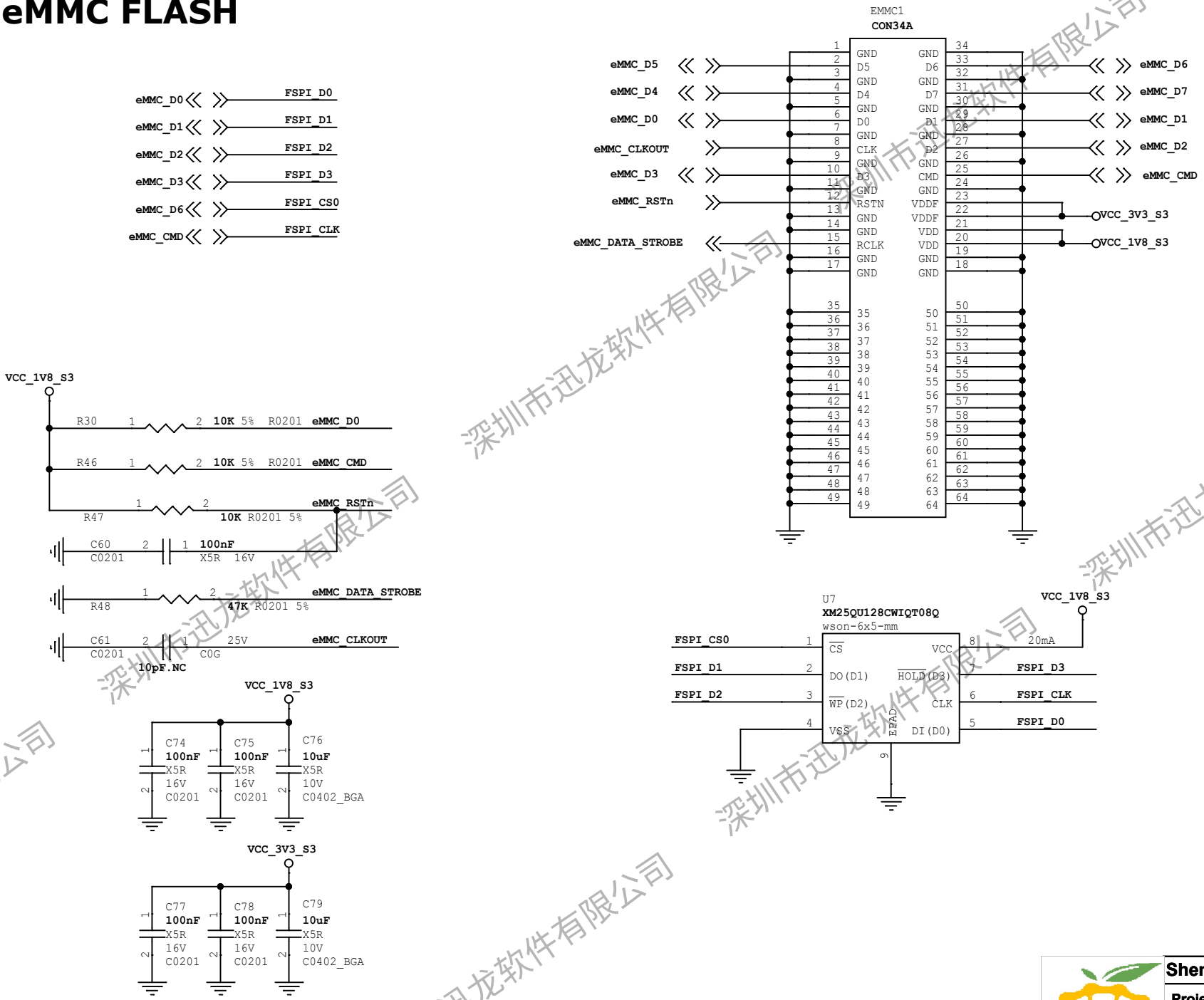

深圳市迅龙软件有限公司

Shenzhen Xunlong Software Co., Ltd					
Project:	OPi 5 Pro				
File:	16.Flash-eMMC Flash				
Date:	Monday, June 03, 2024			Rev:	V1.2
Size:	A3	Sheet:	16	Of:	28

TF CARD

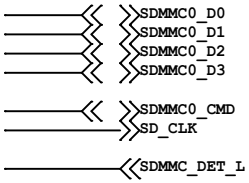

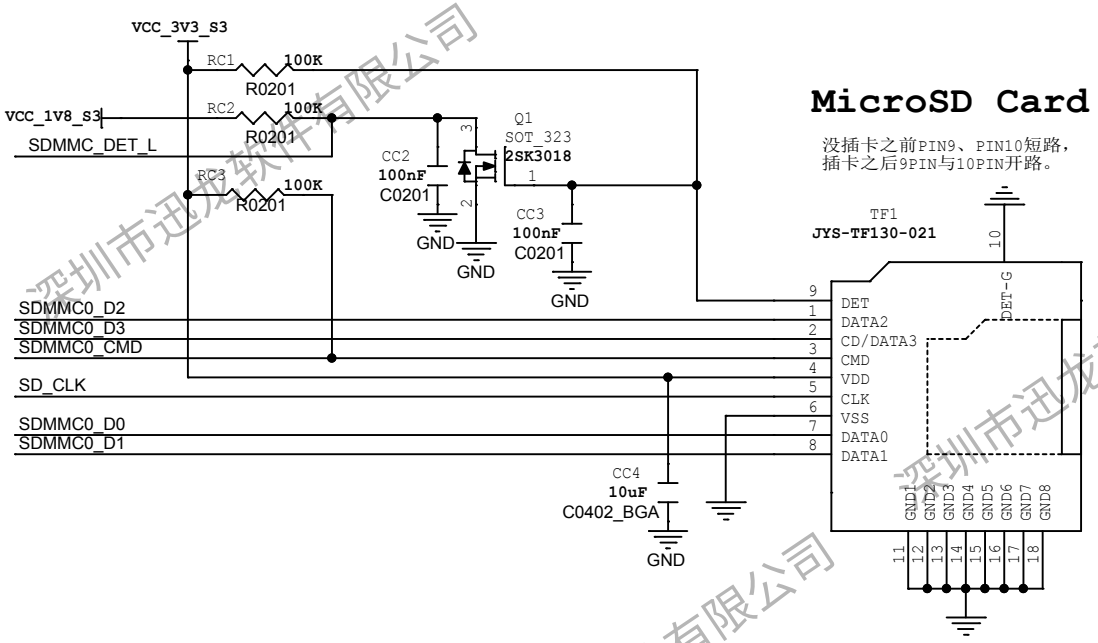

深圳市迅龙软件有限公司

Shenzhen Xunlong Software Co., Ltd					
Project:	OPi 5 Pro				
File:	17.Flash-TF Card				
Date:	Monday, June 03, 2024			Rev:	V1.2
Size:	A3	Sheet:	17	Of:	28

MIPI-CSI0_RX

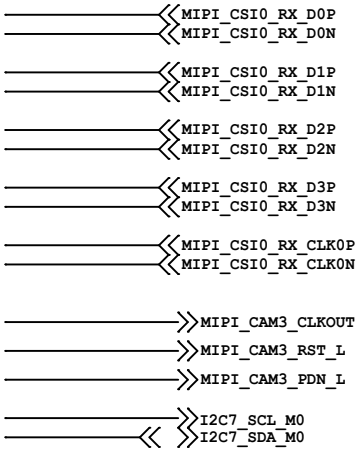

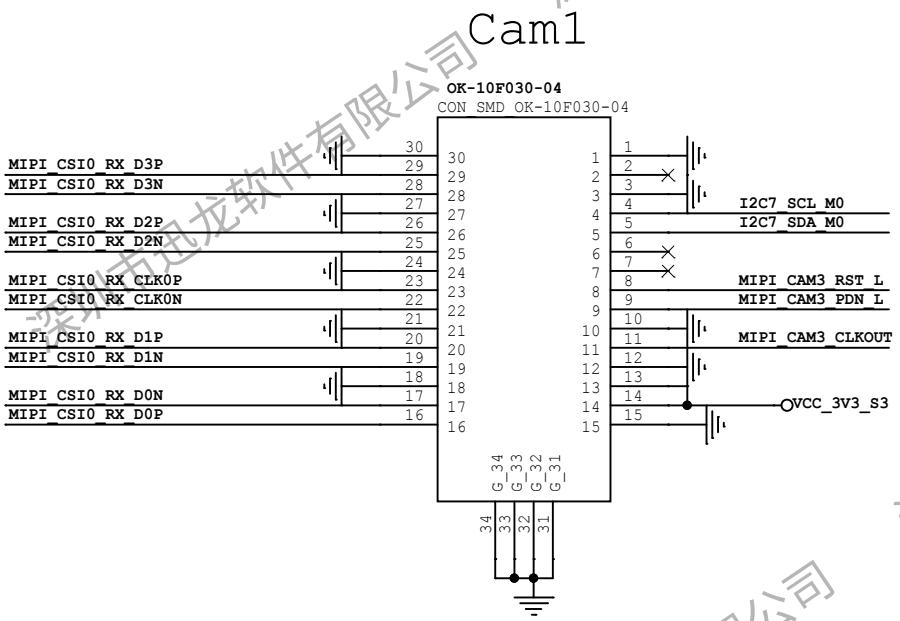

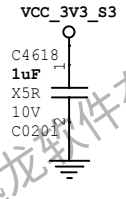

深圳市迅龙软件有限公司

Shenzhen Xunlong Software Co., Ltd					
Project:	OPi 5 Pro				
File:	18.VI-Cam MIPI CSI0-RX				
Date:	Monday, June 03, 2024			Rev:	V1.2
Size:	A3	Sheet:	18	Of:	28

VI-Camera DPHY_RX

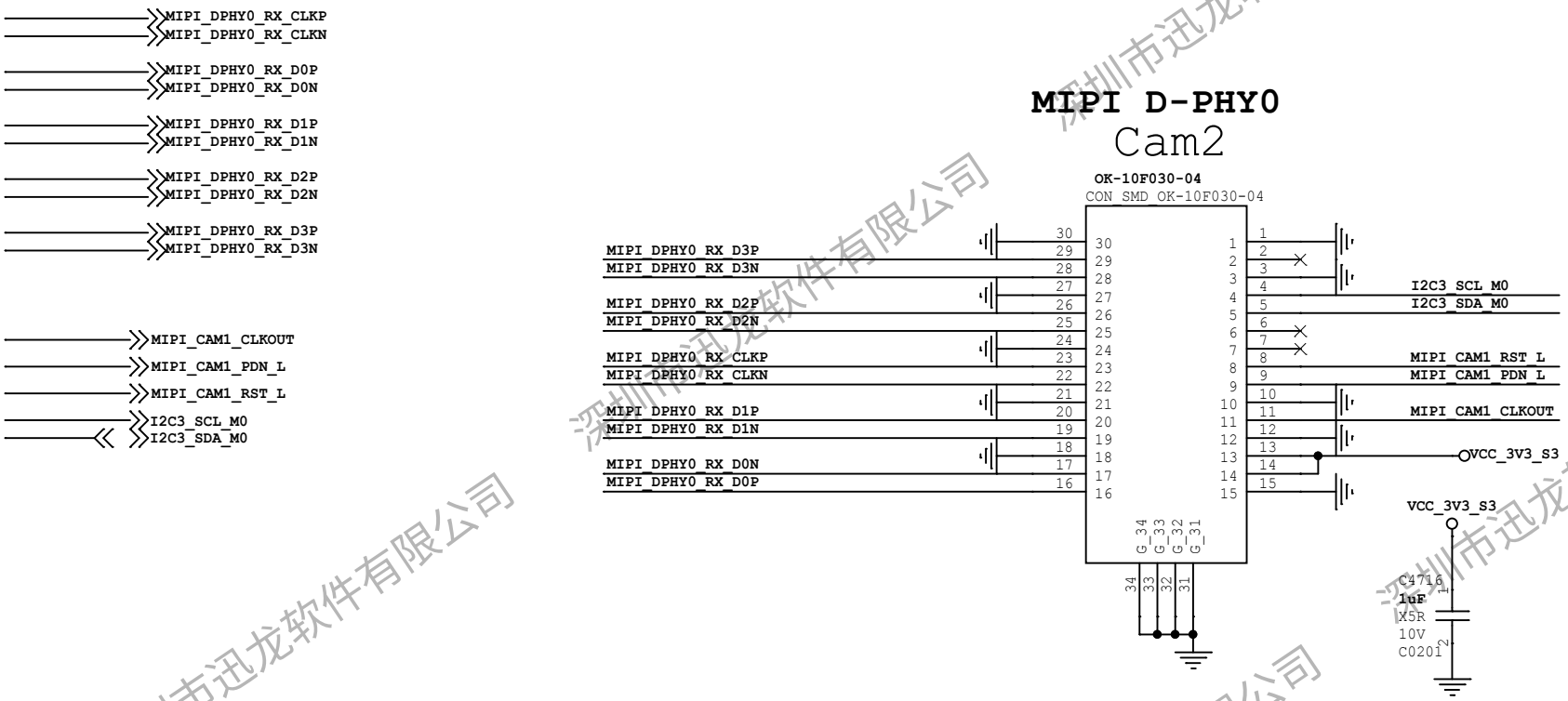

深圳市迅龙软件有限公司

Shenzhen Xunlong Software Co., Ltd					
Project:	OPi 5 Pro				
File:	19.VI-Cam MIPI-DPHY-RX				
Date:	Monday, June 03, 2024			Rev:	V1.2
Size:	A3	Sheet:	19	Of:	28

HDMI2.1 TX0

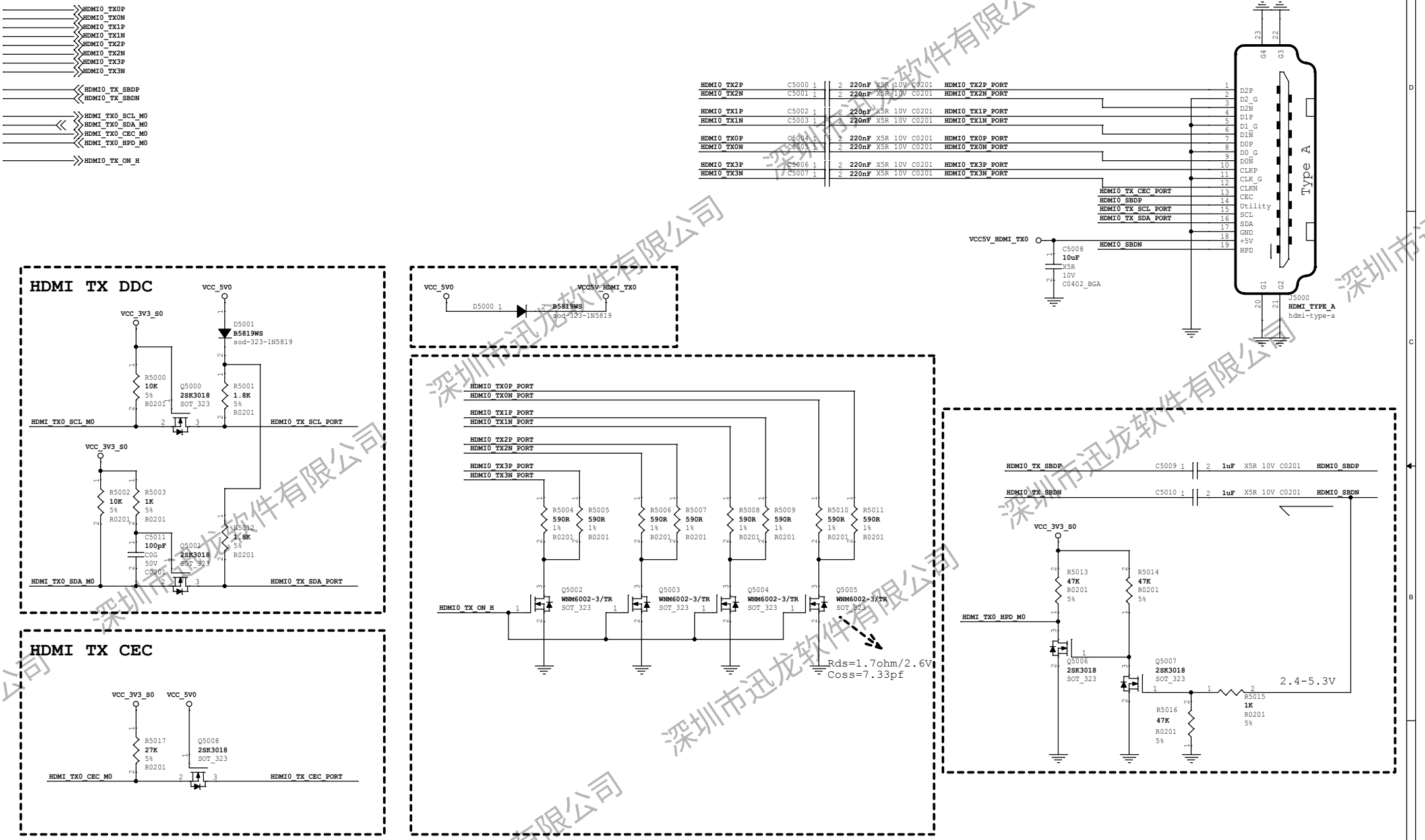

深圳市迅龙软件有限公司

Shenzhen Xunlong Software Co., Ltd			
Project:	OPi 5 Pro		
File:	20.VO-HDMI2.1 TX		
Date:	Monday, June 03, 2024	Rev:	V1.2
Size:	A3	Sheet: 20	Of: 28

MIPI DPHY1 TX

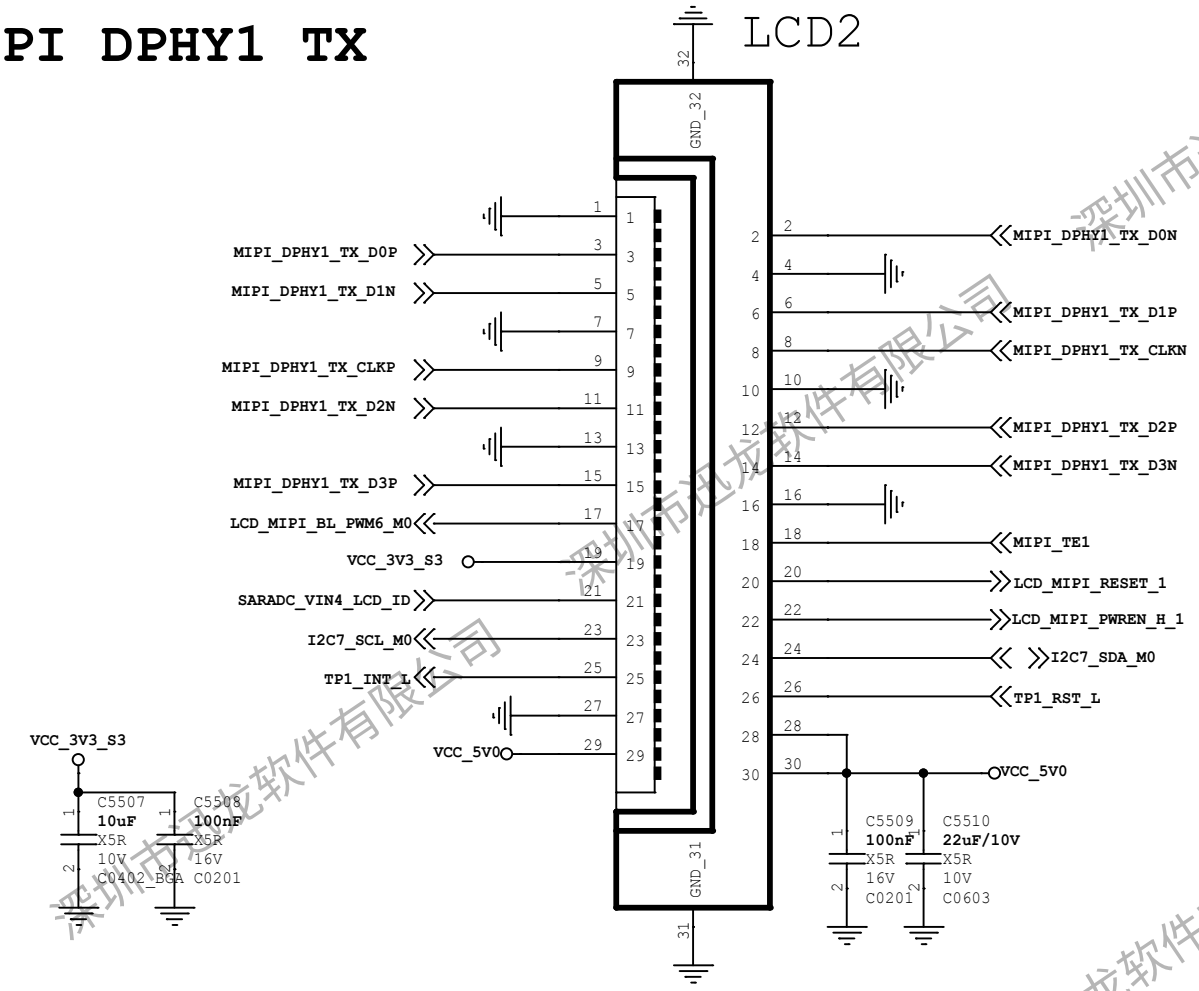

FPC Pin List

Pin1 :GND
Pin2 :D0N
Pin3 :D0P
Pin4 :GND
Pin5 :D1N
Pin6 :D1P
Pin7 :GND
Pin8 :CLKN/AUXN
Pin9 :CLKP/AUXP
Pin10:GND
Pin11:D2N
Pin12:D2P
Pin13:GND
Pin14:D3N
Pin15:D3P
Pin16:GND
Pin17:LCD_PWM_BL
Pin18:LCD_TE
Pin19:VCC3V3_LCD
Pin20:LCD_RST
Pin21:LCD_ID
Pin22:LCD_PWREN
Pin23:TP_I2C_SCL
Pin24:TP_I2C_SDA
Pin25:TP_INT
Pin26:TP_RST
Pin27:GND
Pin28:5V0
Pin29:5V0
Pin30:5V0

深圳市迅龙软件有限公司

Shenzhen Xunlong Software Co., Ltd					
Project:	OPi 5 Pro				
File:	21.VO-MIPI_LCD				
Date:	Monday, June 03, 2024			Rev:	V1.2
Size:	A3	Sheet:	21	Of:	28

PCIE TO RJ45

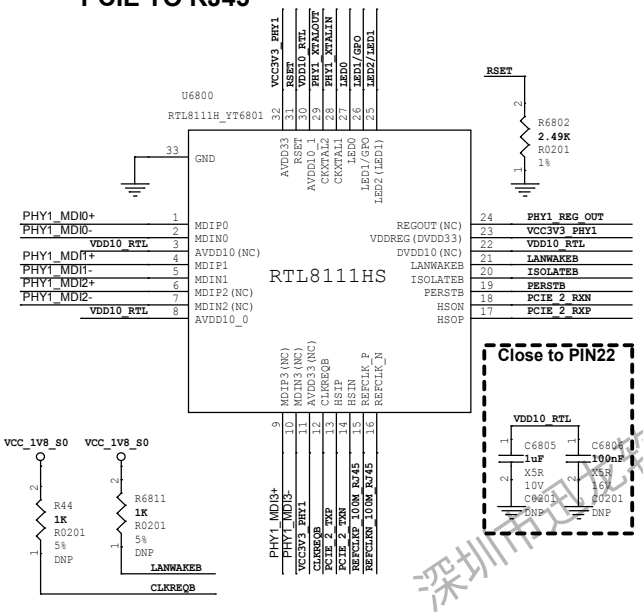

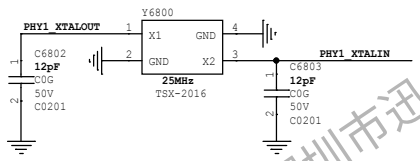

CKXTAL1(I): Input of 25Mhz Clock Reference.
CKXTAL2(IO): Input of External Clock Source
Output of 25Mhz Clock Reference.

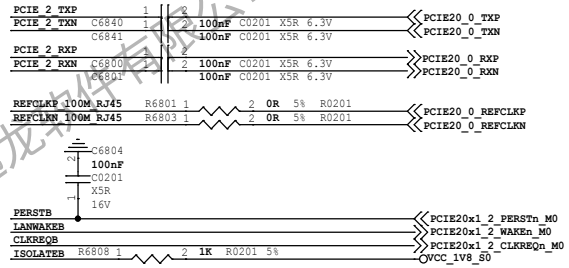

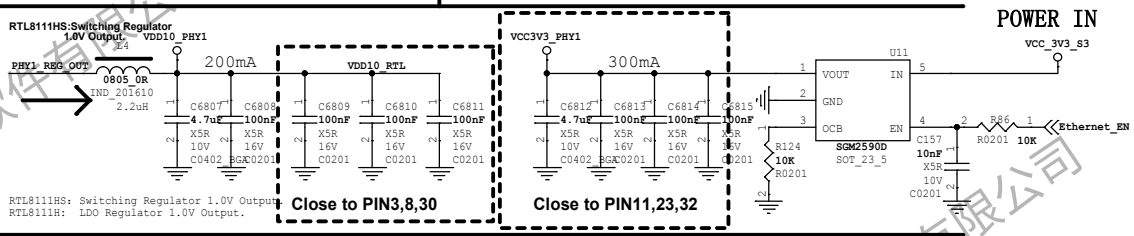

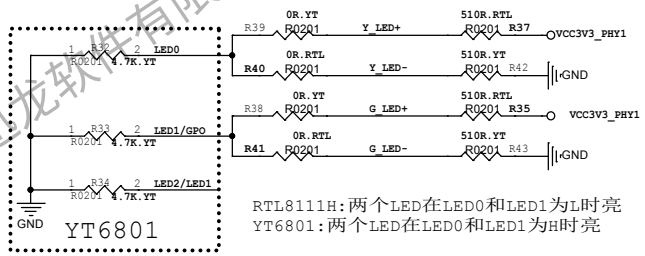

RTL8111H:两个LED在LED0和LED1为L时亮
YT6801:两个LED在LED0和LED1为H时亮

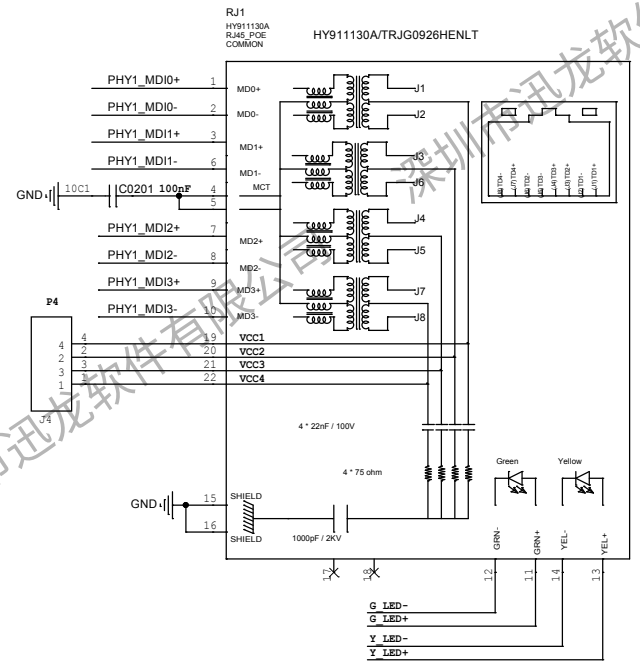

深圳市迅龙软件有限公司

Shenzhen Xunlong Software Co., Ltd					
Project:	OPi 5 Pro				
File:	22.Ethernet-PCIE				
Date:	Monday, June 03, 2024			Rev:	V1.2
Size:	A3	Sheet:	22	Of:	28

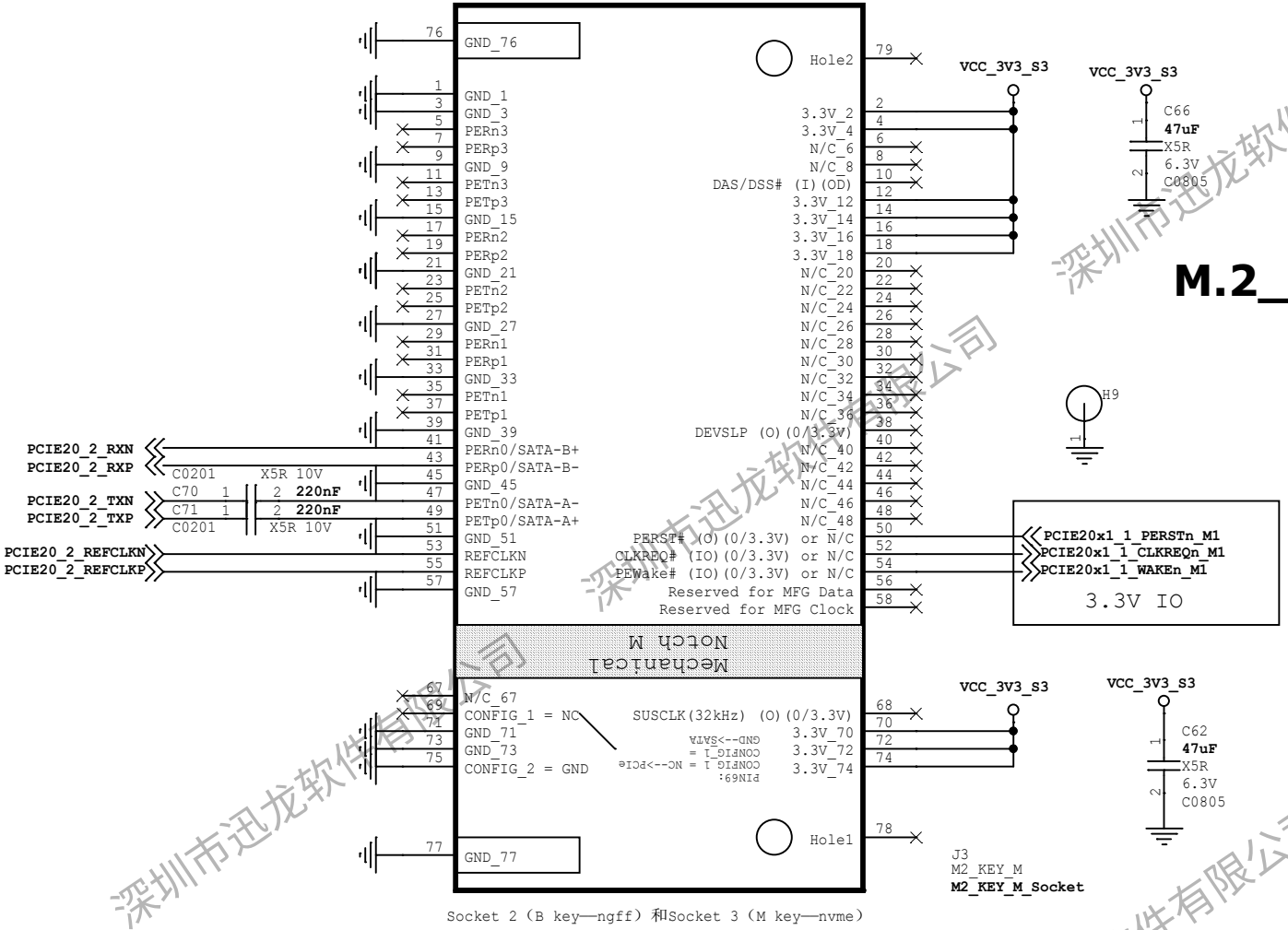

Socket 2（B key—ngff）和Socket 3（M key—nvme）

M.2 NVME

M.2_PCIe/SATA_ Interface

深圳市迅龙软件有限公司

Shenzhen Xunlong Software Co., Ltd					
Project:	OPi 5 Pro				
File:	23.M.2_PCIe_SATA				
Date:	Monday, June 03, 2024			Rev:	V1.2
Size:	A3	Sheet:	23	Of:	28

CODEC ES8388

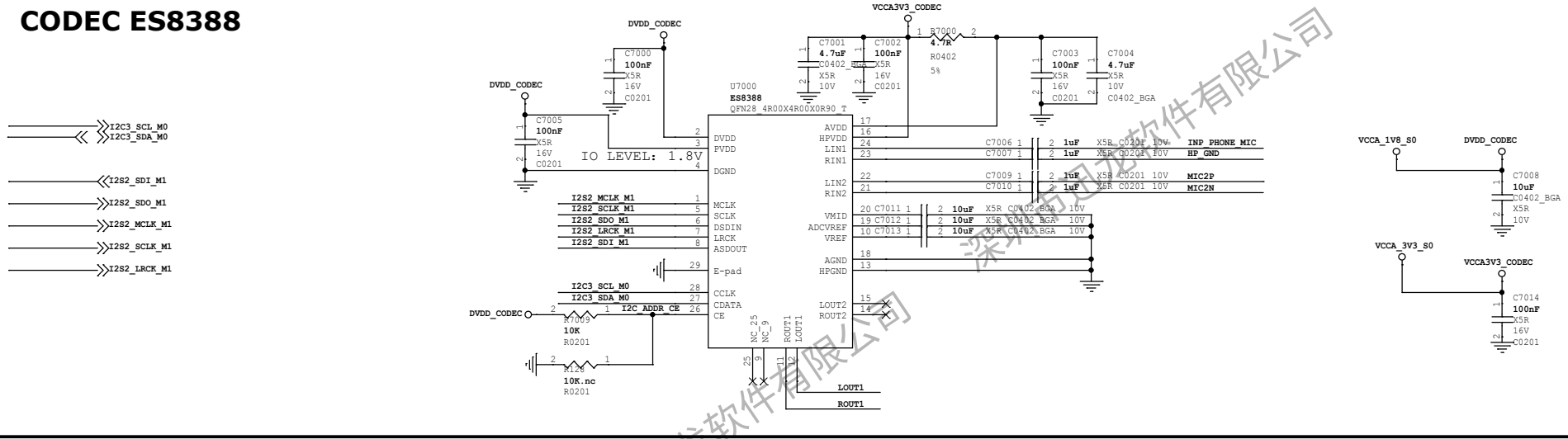

EARPHONE

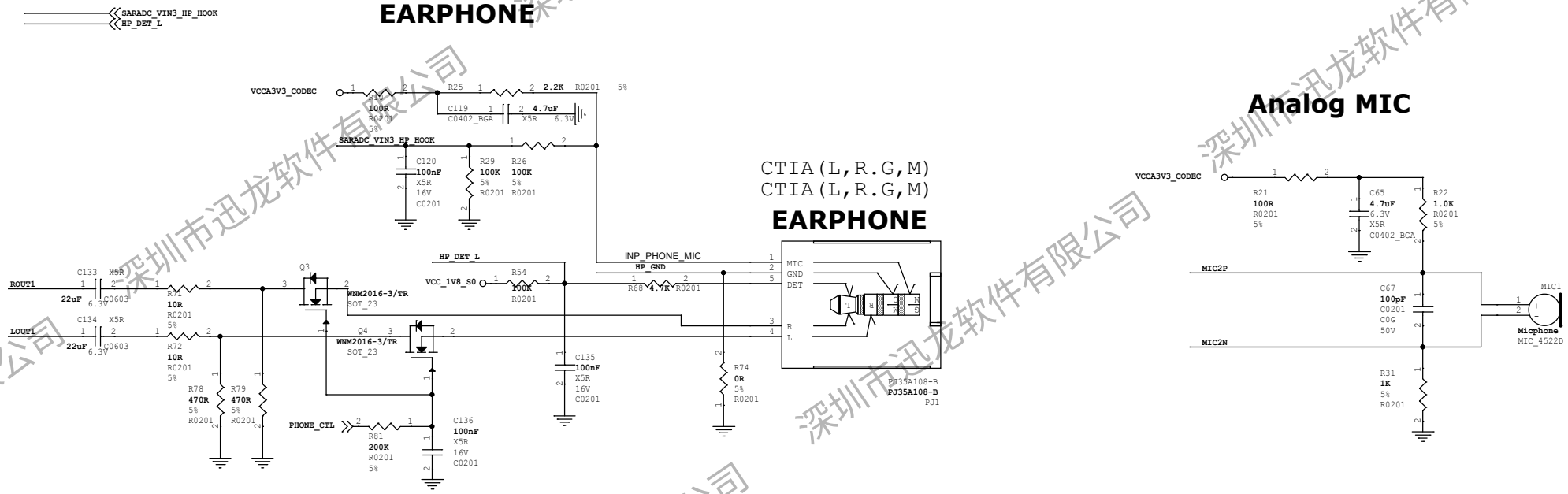

Analog MIC

深圳市迅龙软件有限公司

Shenzhen Xunlong Software Co., Ltd					
Project:	OPi 5 Pro				
File:	24.Audio Codec(ES8388)				
Date:	Monday, June 03, 2024			Rev:	V1.2
Size:	A3	Sheet:	24	Of:	28

EXT I/O

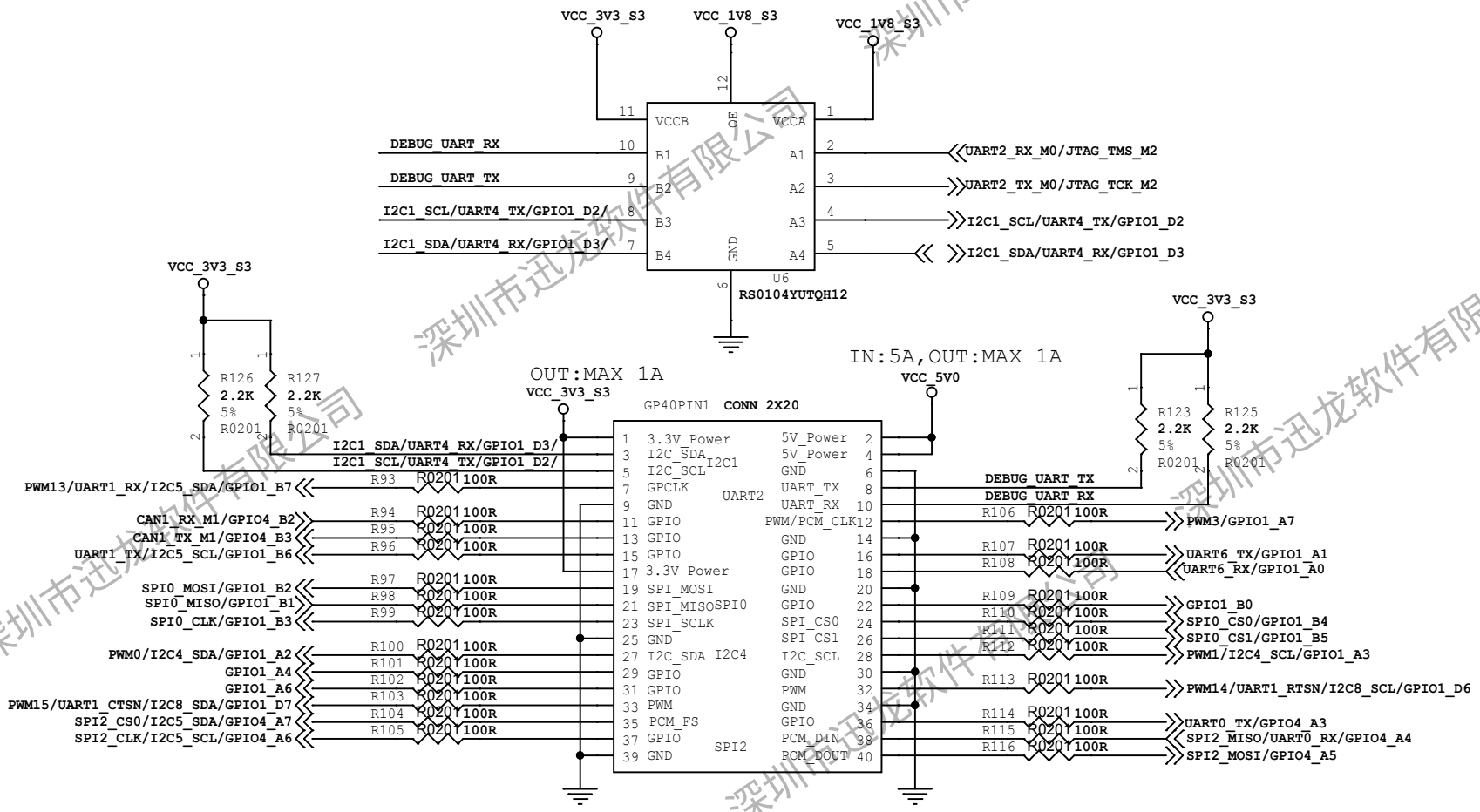

深圳市迅龙软件有限公司

Shenzhen Xunlong Software Co., Ltd					
Project:	OPi 5 Pro				
File:	25.EXT_ GPIO/Debug				
Date:	Monday, June 03, 2024			Rev:	V1.2
Size:	A3	Sheet:	25	Of:	28

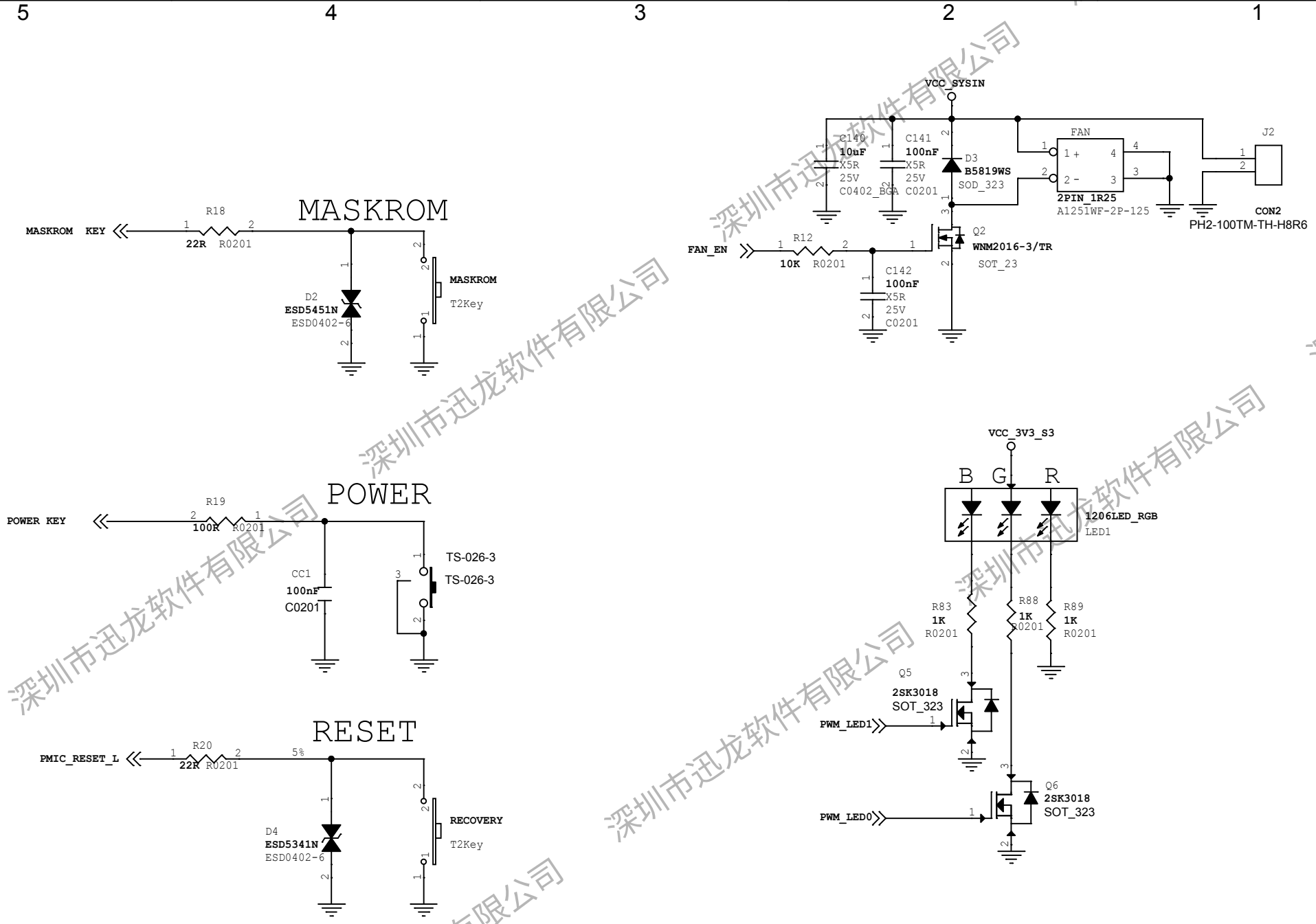

深圳市迅龙软件有限公司

Shenzhen Xunlong Software Co., Ltd					
Project:	OPi 5 Pro				
File:	26 KEY/ LED/FAN				
Date:	Monday, June 03, 2024			Rev:	V1.2
Size:	A3	Sheet:	26	Of:	28

LT8711UXD_U2

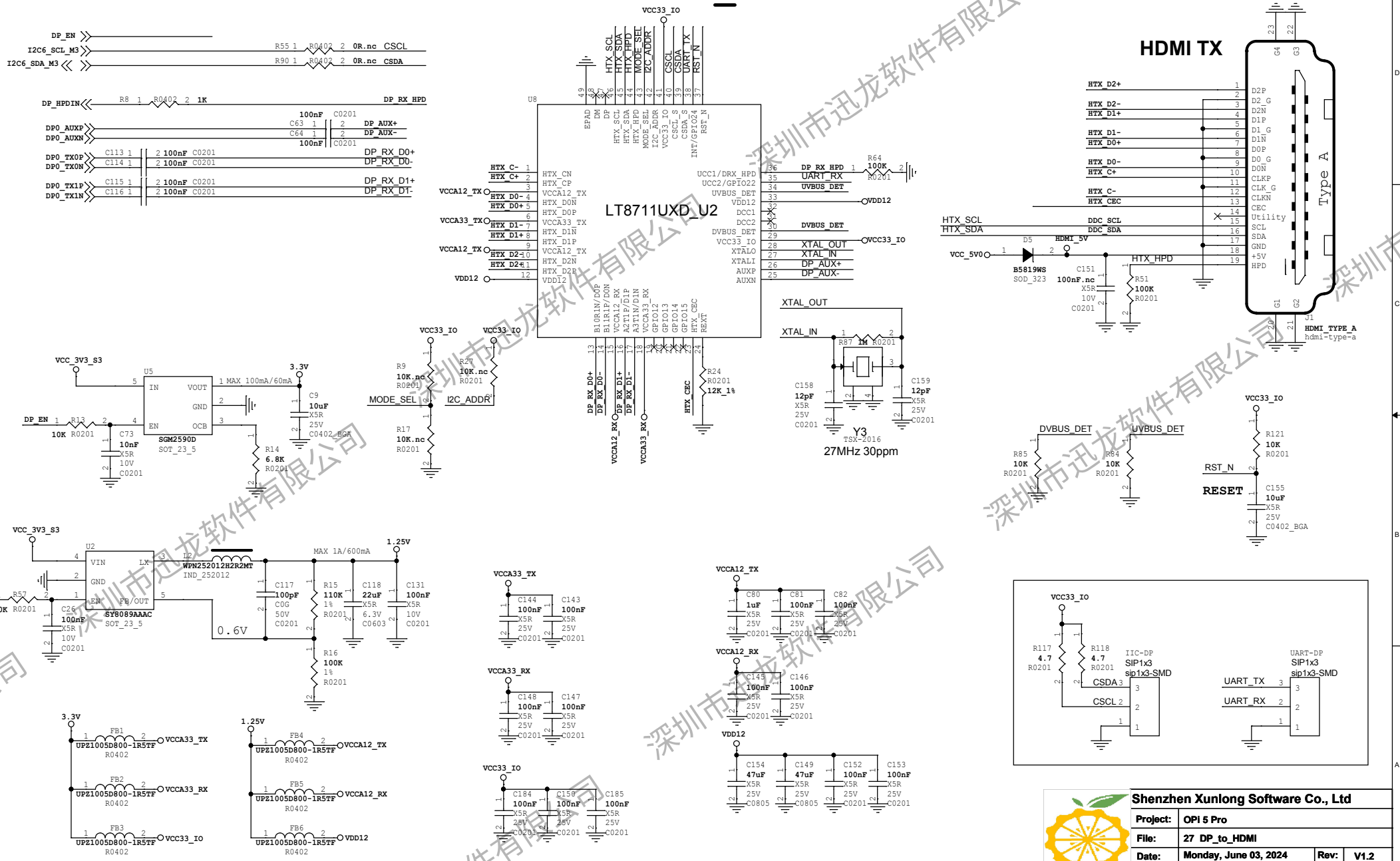

Shenzhen Xunlong Software Co., Ltd					
Project:	OPI 5 Pro				
File:	27 DP_to_HDMI				
Date:	Monday, June 03, 2024			Rev:	V1.2
Size:	A3	Sheet:	27	Of:	28

深圳市迅龙软件有限公司

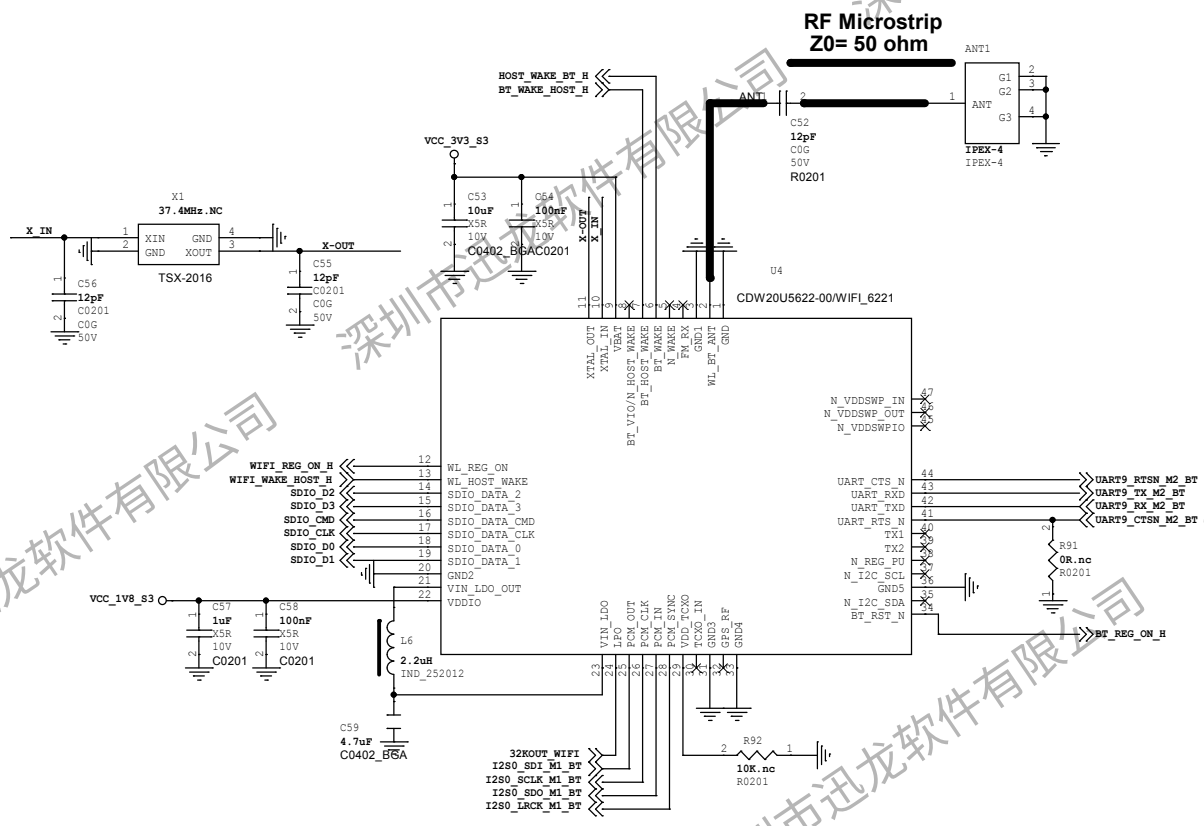

Shenzhen Xunlong Software Co., Ltd					
Project:	OPi 5 Pro				
File:	28.WIFI/BT-SDIO				
Date:	Monday, June 03, 2024			Rev:	V1.2
Size:	A3	Sheet:	28	Of:	28

深圳市迅龙软件有限公司